Friendess, Inc.

Friendess TubesT Tube Nesting Software

User Manual

Document version: V1.2

Software version: 1.21.3

Content

1. Quick Start..... 5

1.1 User Interface..... 5

1.2 Operation Flow..... 6

1.2.1 Add Parts..... 6

1.2.1 Modify Design..... 7

1.2.2 Set Technique..... 8

1.2.3 Nest Parts..... 8

1.2.4 Sort Parts..... 9

1.2.5 Export File..... 9

2. Function Features..... 10

2.1 Operation Features..... 10

2.1.1 Select..... 10

2.1.2 Display..... 10

2.1.3 Adjust View..... 11

2.2 Add Parts..... 12

2.2.1 Import from Existing File..... 13

2.2.2 Standard Shape..... 16

2.2.3 Create Wrap Feature Part..... 17

2.2.4 Draw a Part..... 17

2.2.5 Create by Excel Table..... 19

2.3 Technique Setting..... 20

2.3.1 Start Point..... 20

2.3.2 Cooling Point..... 20

2.3.3 Lead Line..... 21

2.3.4 Kerf Compensate..... 23

2.3.5 Extended Style..... 24

2.3.6 Micro Joint..... 26

2.3.7 Grid....27
2.3.8 Delete....27
2.3.9 Clear....28
2.4 Advanced Technique....29
2.4.1 Intersect Hole....29
2.4.2 Inner Wall Contour....31
2.4.3 Weld Kerf Compensate....31
2.4.4 Profile Path....33
2.5 Modify Design....35
2.5.1 3D Vector....35
2.5.2 Rotate Section....38
2.5.3 Break Line....39
2.5.4 Join Line....39
2.5.5 Draw Wrap....41
2.5.6 Draw Text....42
2.5.7 Flip against YOZ Pane....43
2.5.8 Fine Tune Wrapping....43
2.5.9 Adjust R Corner....43
2.5.10 Replace as Point....44
2.5.11 Rectangle Profile Special Path....44
2.5.12 Separate Offset Path....45
2.6 Nest....45
2.6.1 Common Line....45
2.6.2 Auto Nest....49
2.6.3 Manual Nest....51
2.7 Sort....52
2.7.1 Auto Sort....52
2.7.2 Manual Sort....54

2.8 Export File.....55
2.8.1 Export Nesting File.....55
2.8.2 Export Part File.....56
2.9 Other Functions.....56
2.9.1 Simulate.....56
2.9.2 Parts Tolerance.....57
2.9.3 Force Merge.....60
2.9.4 Auto Save *.YXY Format File.....62
2.9.5 Length Unit.....64
2.9.6 Merge Tail.....64

1. Quick Start

This section mainly brief the TubesT operation flow in simple description. Details and application cases will be illustrated in later sections.

1.1 User Interface

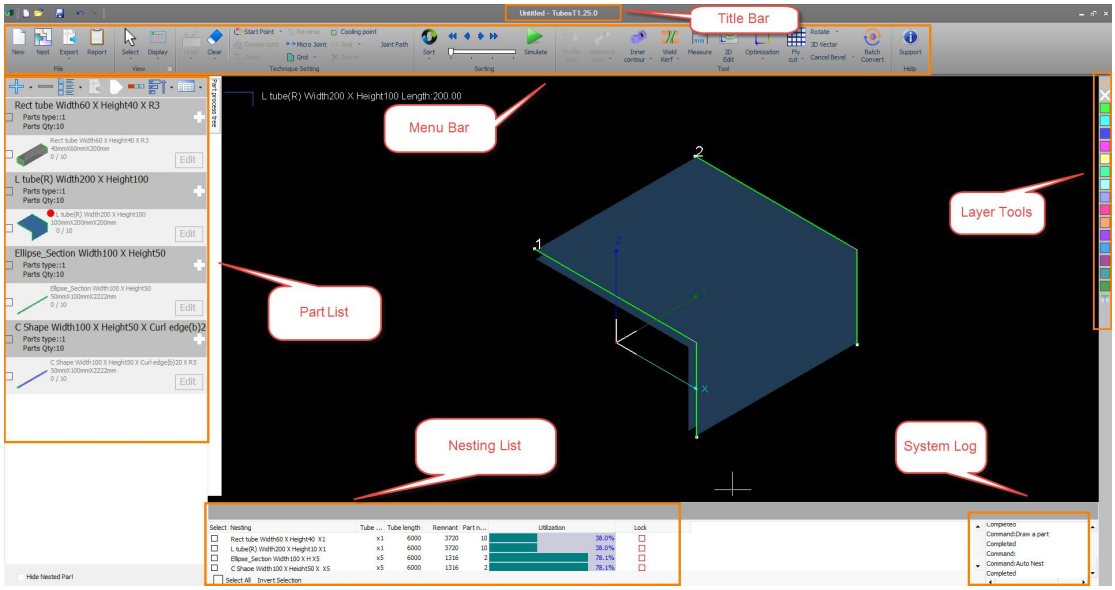

Title Bar (on the very top) shows software version. Underneath is **Menu Bar** where listed function buttons in groups. To the left is **Part List**, to the right is **Layer Tools**. At the very bottom are **Nesting List** and **System Log**.

Double click the part in left list will display full image of this part in editing window. The part marked by red dot is the one displayed full image. The part marked with  indicates it's created by TubesT, double click it will open **'Tube Draw'** workspace to modify part design.

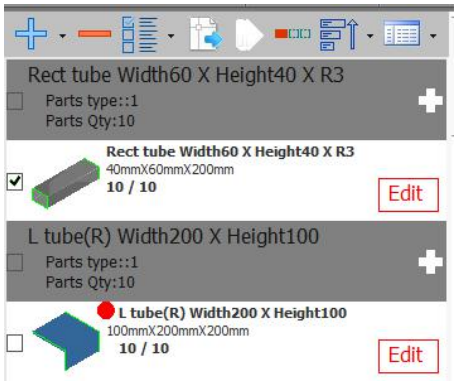

1.2 Operation Flow



Above chart demonstrates TubesT operation flow, next will be brief steps of each process.

1.2.1 Add Parts

Click  in part list and select **'Import from existing file'**.

Browse from file folder and select the file needed (igs, sat or jhb file format). Check the part preview and geometry dimension which have to be same with your original part design, then click 'Open' import the parts in TubesT.

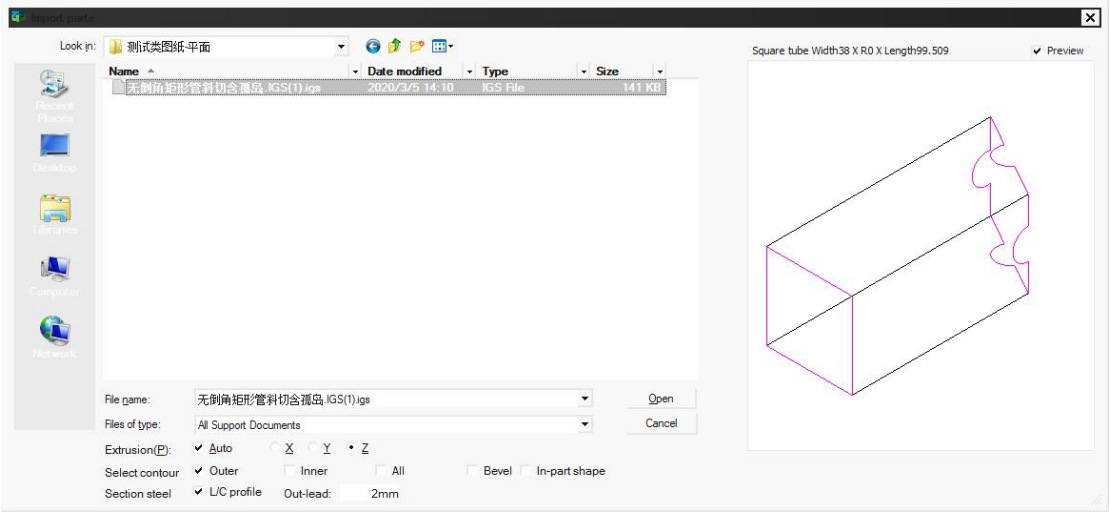

Please take notice that for profile/section steel you must check **'L/C profile'** option.

1.2.1 Modify Design

TubesT allows user to edit part design by rotating part, modifying geometry vector, break line, join lines and drawing wrap etc.

For example, to make a part design fit for laser cutting, like the shape in below demonstration, you have to delete the unnecessary tool path and add lead line, or modify the 3D vector at corner position by which it changes the direction of laser head towards corner and avoid collision. More details and applications will be introduced in later chapter.

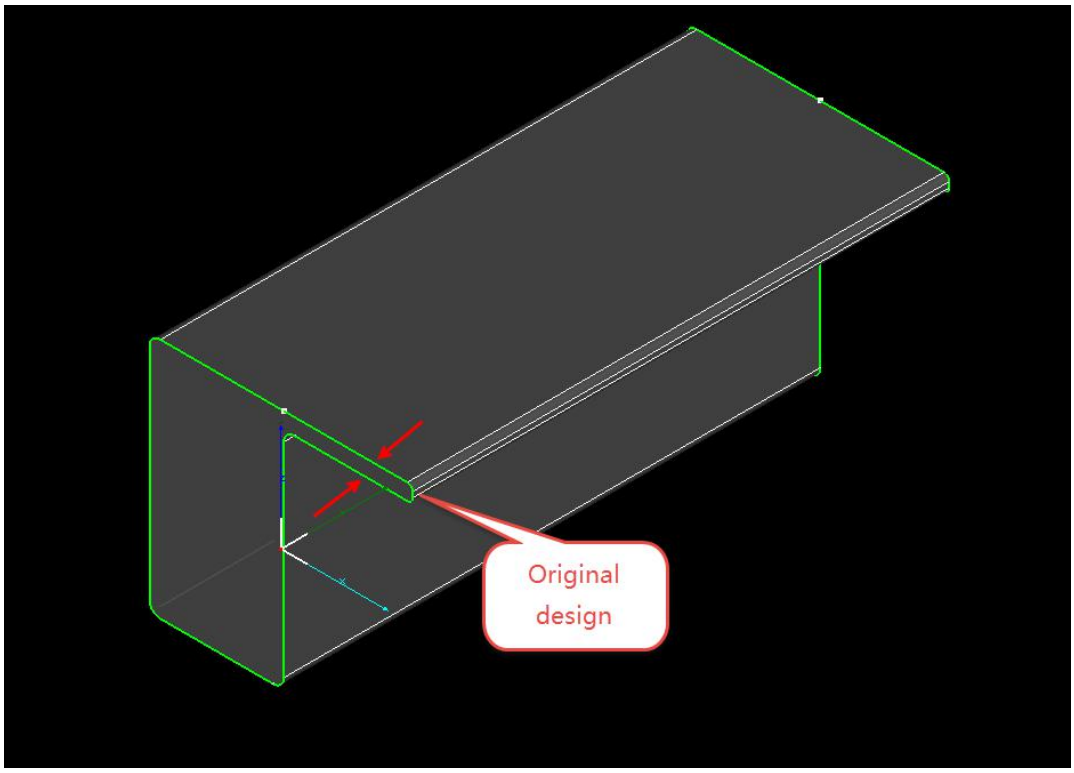

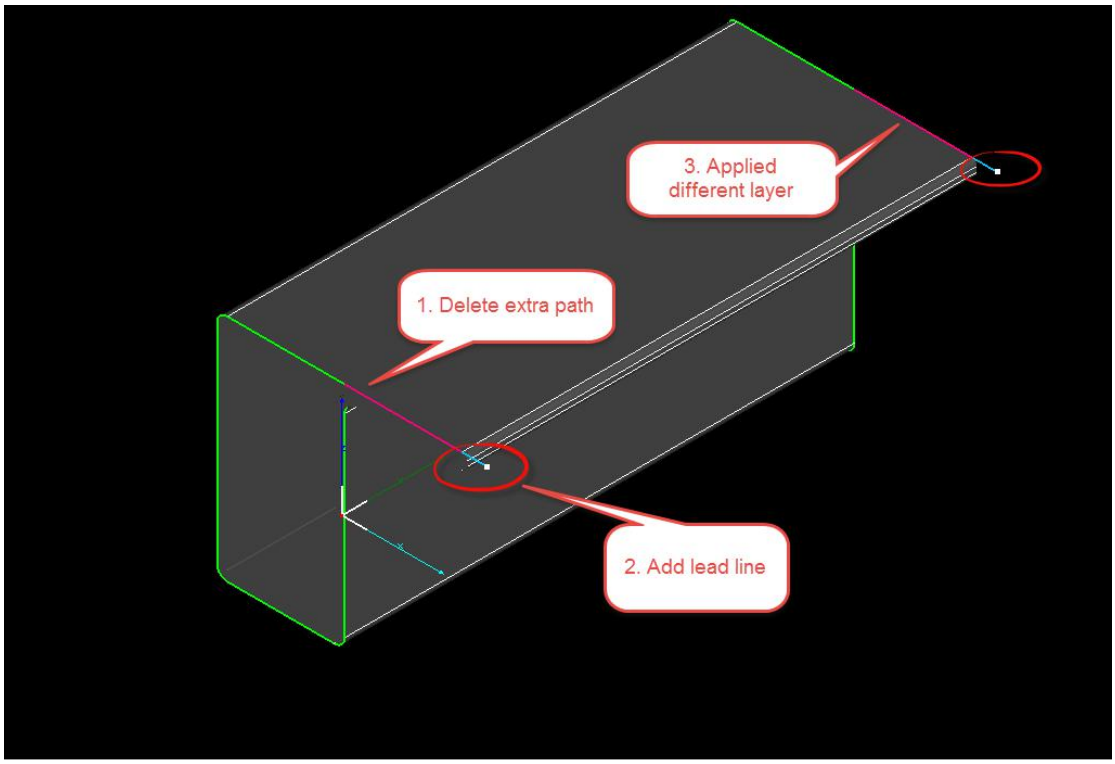

1.2.2 Set Technique

By setting technique to part design including lead line, kerf compensation and pair-hole etc., can improve cutting quality and facilitate post process in part joint and welding. The round part below applied kerf compensation and lead line features, the square part applied welding kerf compensation.

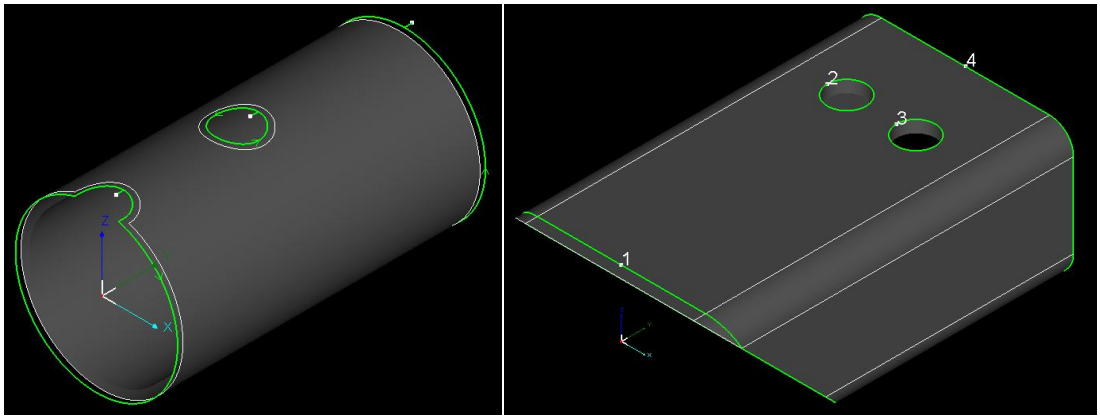

1.2.3 Nest Parts

Input parts quantity and click  open nesting dialog box, finish the tube

settings and select nest strategies click ‘OK’ will start nesting immediately. The nesting results will be listed in bottom window, each nesting labeled with nested part number, nesting quantity and utilization rate etc.

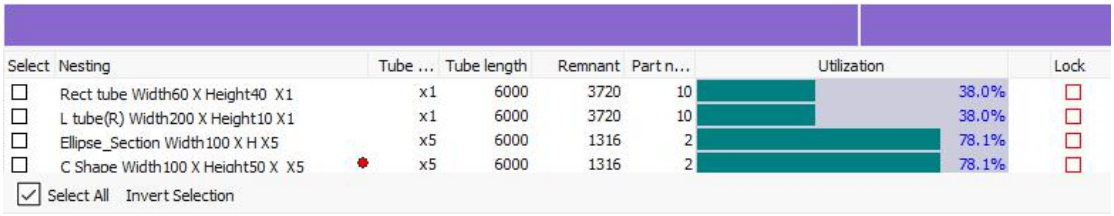

1.2.4 Sort Parts

Click  in top menu sort the nested parts.

1.2.5 Export File

Click  select a file folder where the files to be stored. The default file for cutting is *.zx format.

If the TubePro software on machine cannot recognize *.zx file, it might be that TubePro software version doesn't match with TubesT software version, update TubePro to latest version can solve the problem.

2. Function Features

2.1 Operation Features

2.1.1 Select

In top menu bar, click  open drop down menu that listed options for user to select items. In part list, click  to select among listed parts.

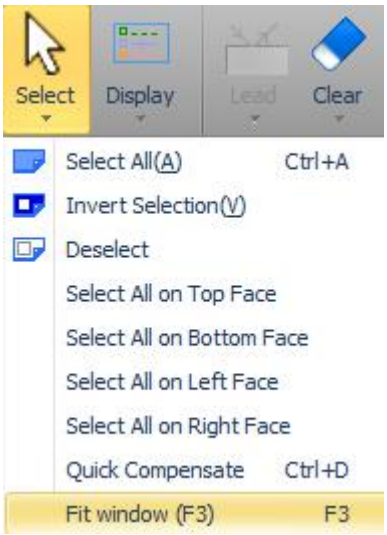



2.1.2 Display

Click  in menu bar open the drop down list to display feature tags applied on part design. The option button in yellow status indicates this effect has been turned on.

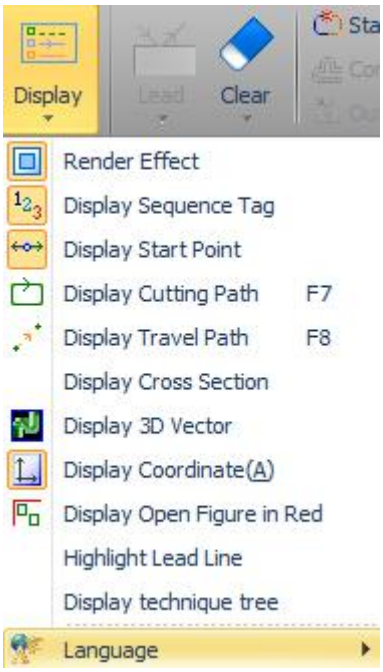

The render effect has limitation to CPU and Memory, if software is jammed by large file or low-level hardware configuration, it's suggested to turn off the render effect. The geometry vector indicates the direction of laser head towards tube wall, this feature plays a role in 'Intersect Hole' technique and '3D Vector Edit' function.

Other options are quiet simple, there will be no more descriptions here.

2.1.3 Adjust View

The part or tube in edit window are available to adjust view by below operations:

1. Rotate around Y axis

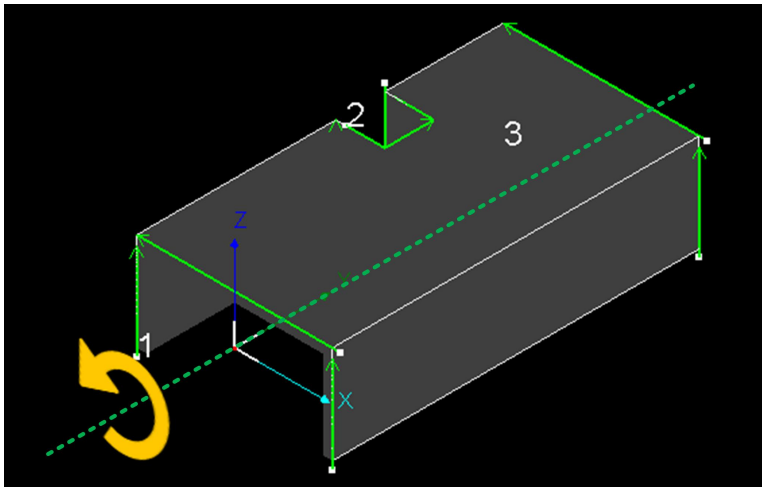

Shift +Scroll Mouse Wheel: slow rotate part entity;

Shift + Press & Drag Mouse Wheel: quick rotate part entity;

Ctrl + Scroll Mouse Wheel: quick rotate part entity.

2. Translate View

Ctrl + Press & Drag Mouse Wheel.

3. Toggle View

Double click at position near the part/tube entity will prompt the float box, click an icon to switch the view.



4. Free View

Press and drag mouse wheel to view part entity freely.

5. Restore Default View

Press F3 will adjust view fit the edit window automatically; Press F4 will return to default view and direction.

2.2 Add Parts

TubesT allows user to add parts via multiple entrance.

When you open TubesT or create a new workspace, there are five entrance in parts list: ‘Import from existing file’, ‘Create by standard shape’, ‘Create wrap feature part’, ‘Draw a part’ and ‘Create by Excel table’. After you add parts in list, click  select an option to add new parts.

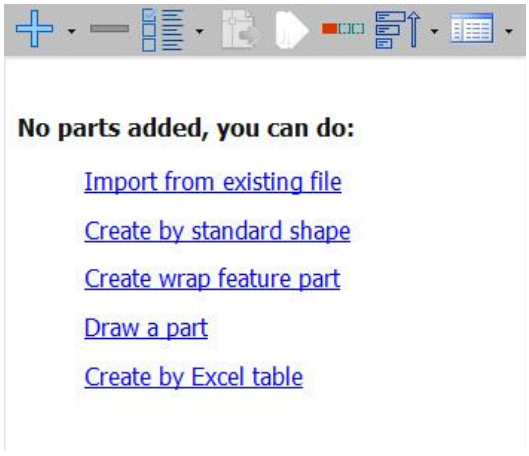

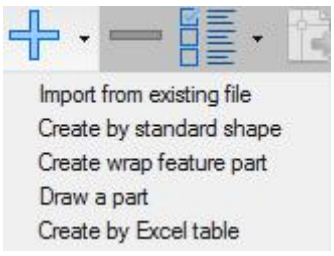

2.2.1 Import from Existing File

Click **Import from existing file** open file browser.

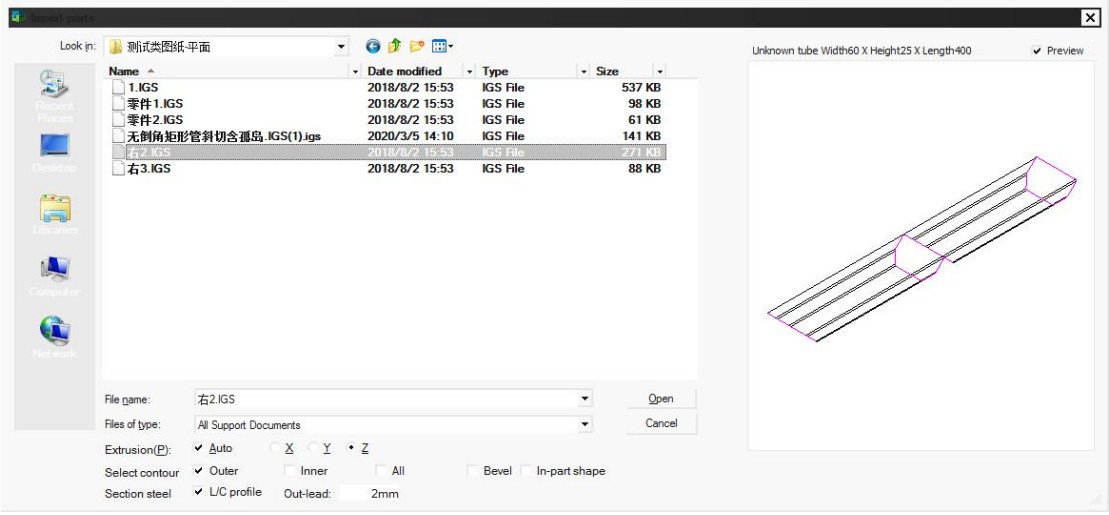

File of below three formats supported:

1、IGS： IGS file created by UG, SolidWorks (extrude direction must be along X/Y/Z);

2、SAT： SAT file created by SolidWorks 2016 and above (no limit of extrude direction for SAT file, select ACIS 16.0 in export setting);

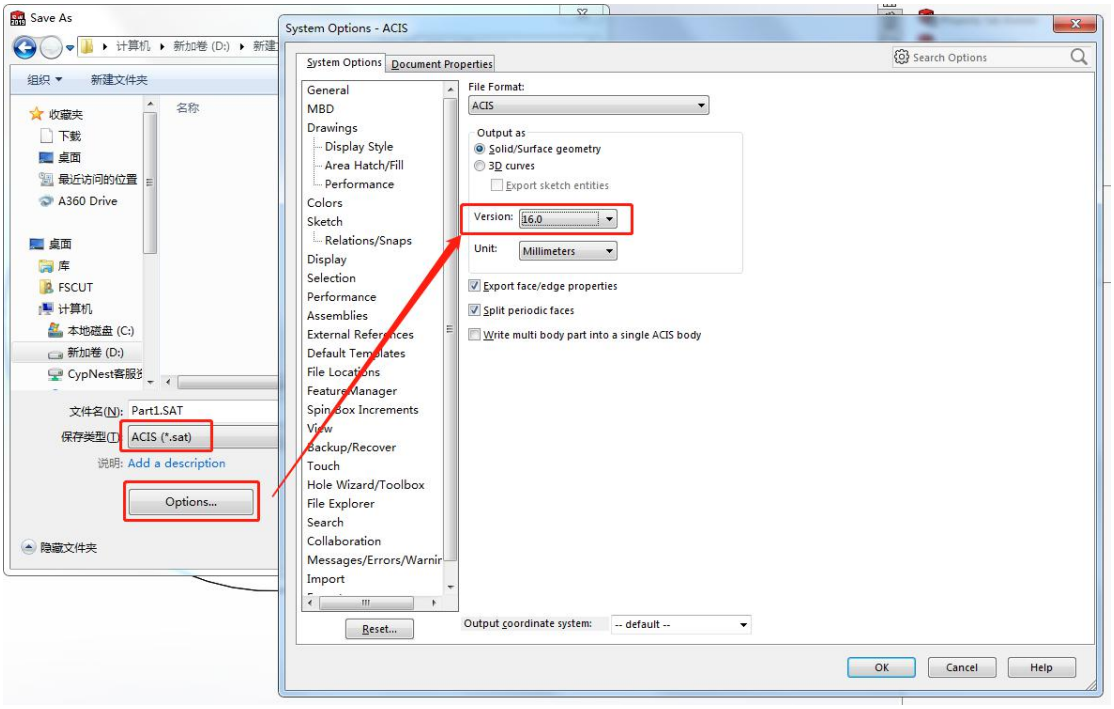

3、jhb： *.jhb format file is sketch file of part design drew and created by TubesT.

There are also some parameters in file browser.



1. Part Shape: The part shape and dimension recognized from file will be shown on top of 'preview window'. If recognized part shape doesn't same with your original design, for example the original design is H beam while recognized result is 'Free form', then the file reading failed. Loading indicates that program is reading file, 0.00x0.00x0.00 indicates no file read in.

2. Preview: If the preview part geometry doesn't same with original part design means you might have selected wrong options under file browser.

3. Extrusion: Auto is to recognize extrusion direction of part entity automatically; if program read wrong extrusion direction, which might cause part profile recognized as other shape, manually select extrusion direction assure identifying right shape.

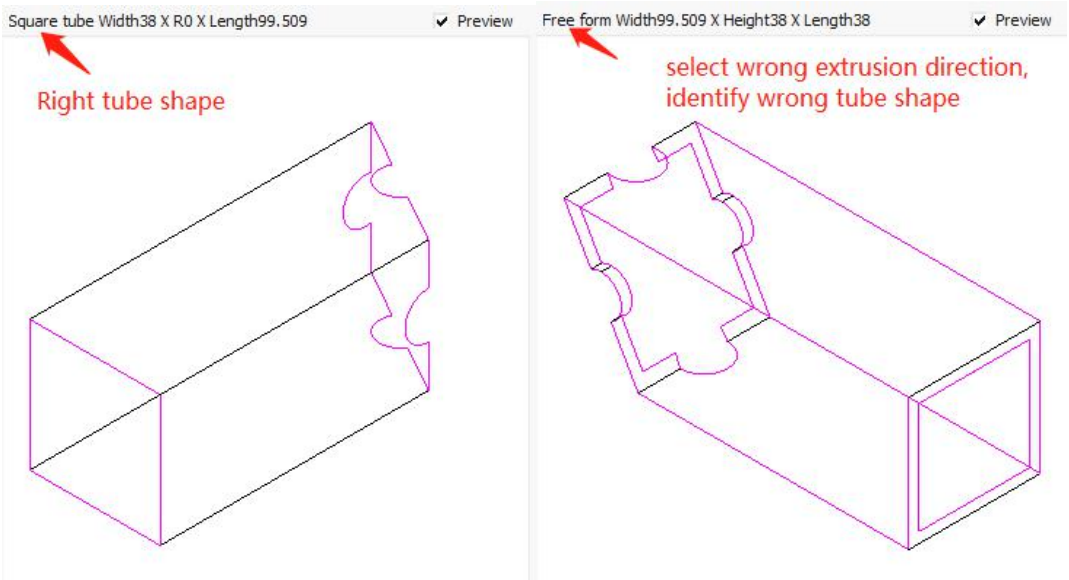

4. Select contour: tubular entity has two contours in profile by nature of wall thickness. Usually keep outer contour as tool path for laser cutting. See more details in compensate and inner contour sections.

5. Section steel: for section steel of U shape, L shape, H shape and C shape, select ☑ L/C profile for TubesT to create right tool path when import file. Out-lead is the lead line introduced from outside of section steel when create tool path of section steel automatically.

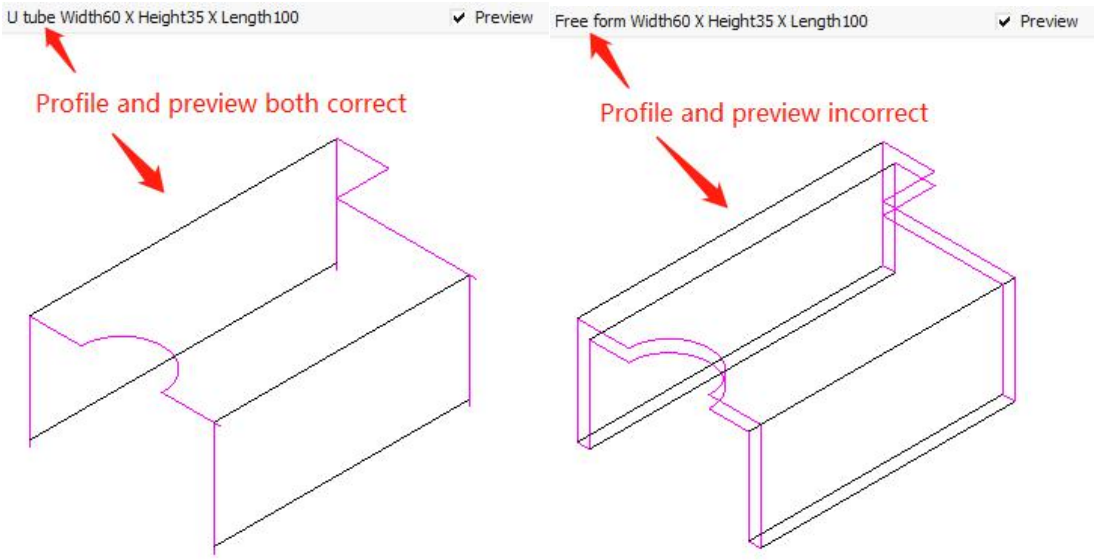

6. In-part shape: for the facet part nested in waste area on tube face, select this option ☑ In-part shape for TubesT to generate right tool path.

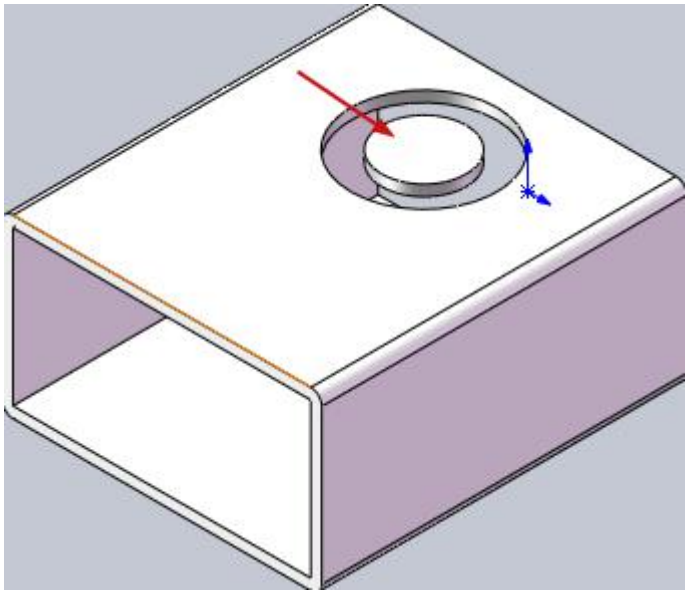

2.2.2 Standard Shape

You can create a part with standard shape in TubesT. Part design styles are limited but quick and easy for simple part creation.

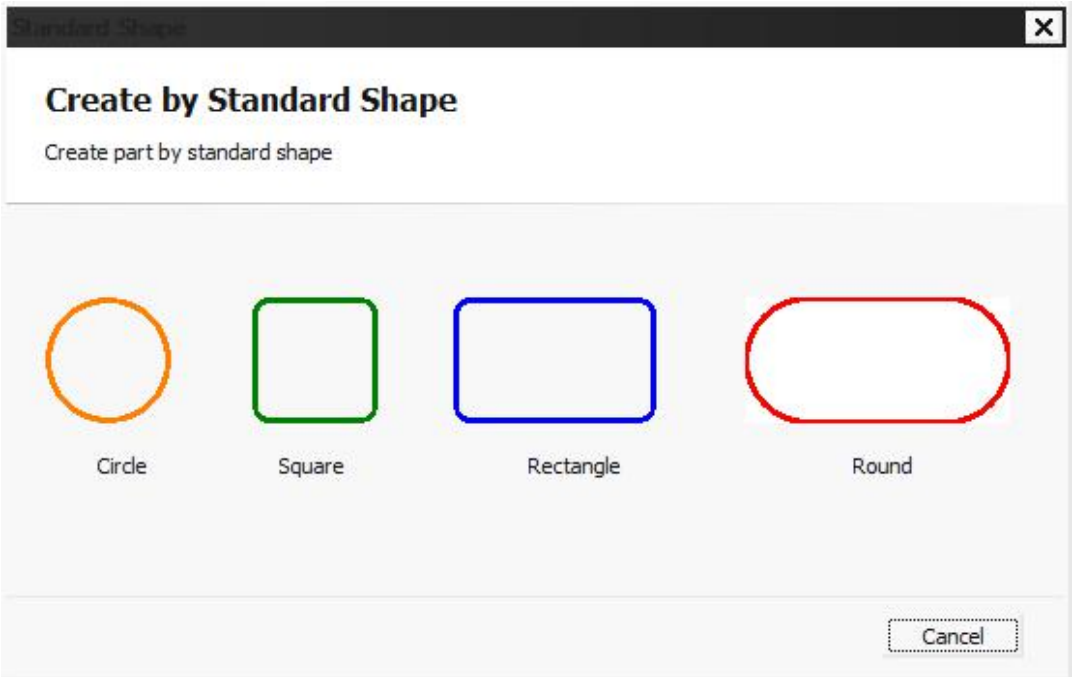

2.2.3 Create Wrap Feature Part

TubesT allows to create part of standard shape with wrap feature.

For rounded rectangle section, select 'ignore fillet' with respect to wrapping position.

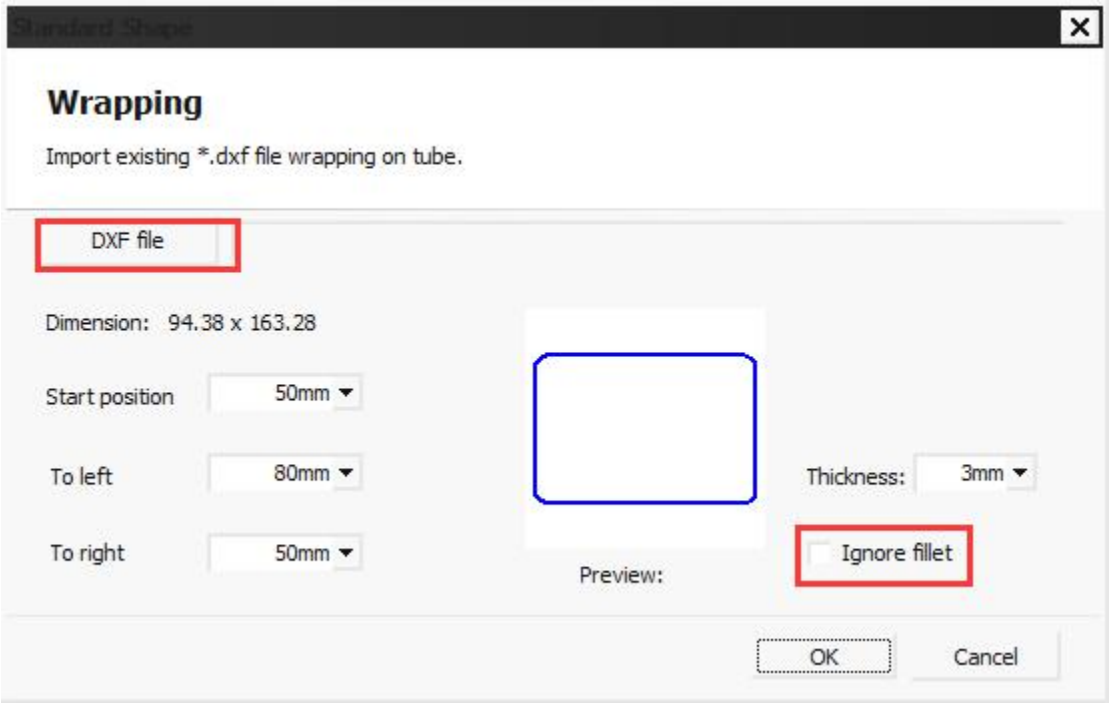

2.2.4 Draw a Part

Available part shapes in TubesT are circle, rectangle, Obround, angle, U shape, C shape, triangle and ellipse. Available wrapping shapes on tube surface are circle, rectangle and Obround. Support to array holes along X/Y/Z direction on tube surface. Support to cut extrusion from any direction.

Click **'Draw a part'** enter **'Tube Draw'** workspace to create part.

Click **'Main Body'** and you can see profile shape, parametric setting and profile preview on left side. Modify the parameter settings, the part entity will change accordingly. Click **Apply** finish the main body creation.

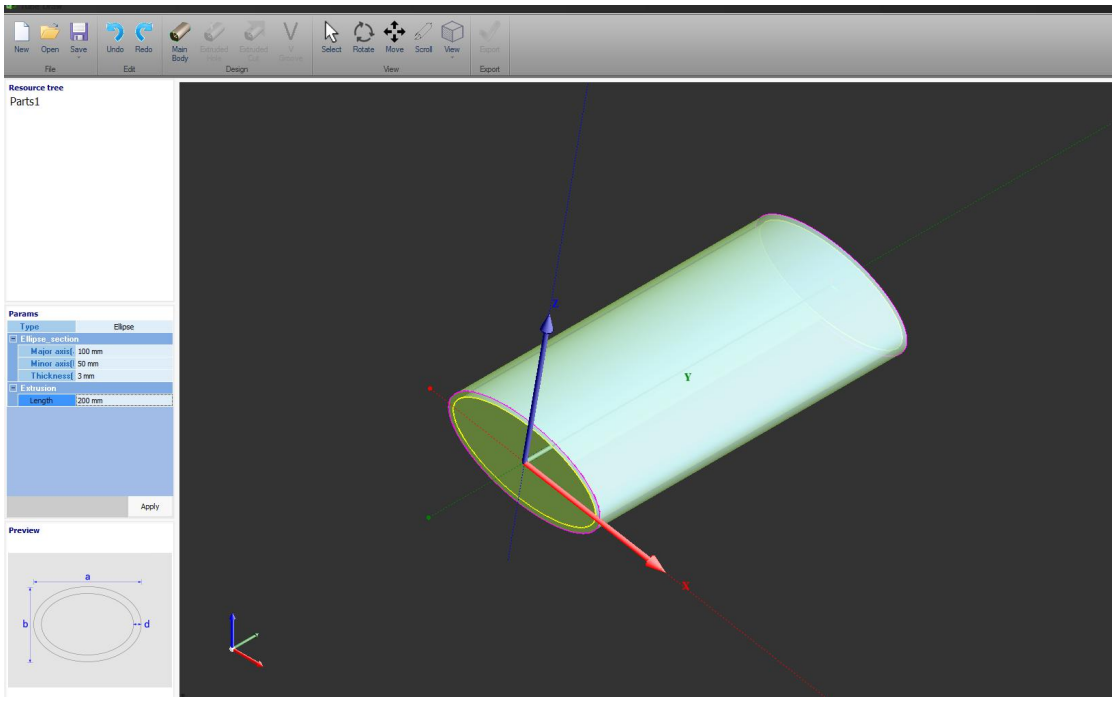

The existing shapes in TubesT are the standard and common shapes, you can also import in 2D shape of *.dxf file, then extrude it into 3D entity.

Click **'Extruded Hole'** to design wrapping feature on tube body. Existing shapes of intersect hole are circle, rectangle, Obround, or you can add free design of dxf file (it must be a closed contour). 'X/Y/Z Rotate' can change the extrude direction of intersect hole. **Array** is to duplicate intersect hole along X/Y/Z direction.

Click **'Extruded Cut'** to design the cut-off section. Rotate and translate the extrusion cut pane by parametric setting. Click 'Cut Left' will preserve the body on right side of the extrusion cut pane. If not selected will preserve the body on left side.

'V Groove' can be used to part design of circle and rectangle shape.

'Resource Tree' on the top displays the design features in each creation step, right click to hide or delete a designed feature.

Click 

finish part design and export to part list. Double click 

on the part to modify the part again.

In 'Tube Draw' workspace you can save part sketch as jhb format file and open it to change the design again. Entrance is in ‘File group’ on top menu. **Open** is to open a jhb file. **New** is to create a blank workspace.

2.2.5 Create by Excel Table

‘Create by Excel table’ is to import volume parts by an Excel table in which the tube profile and dimension are defined by parameters. TubesT will create parts via Excel table automatically.

Supported parts profile are circle, rectangle and Obround without wrap/hole feature. Support oblique section.

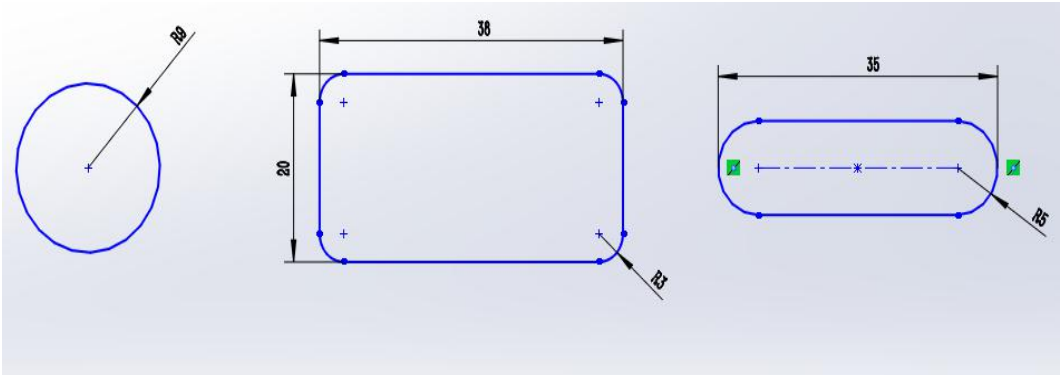

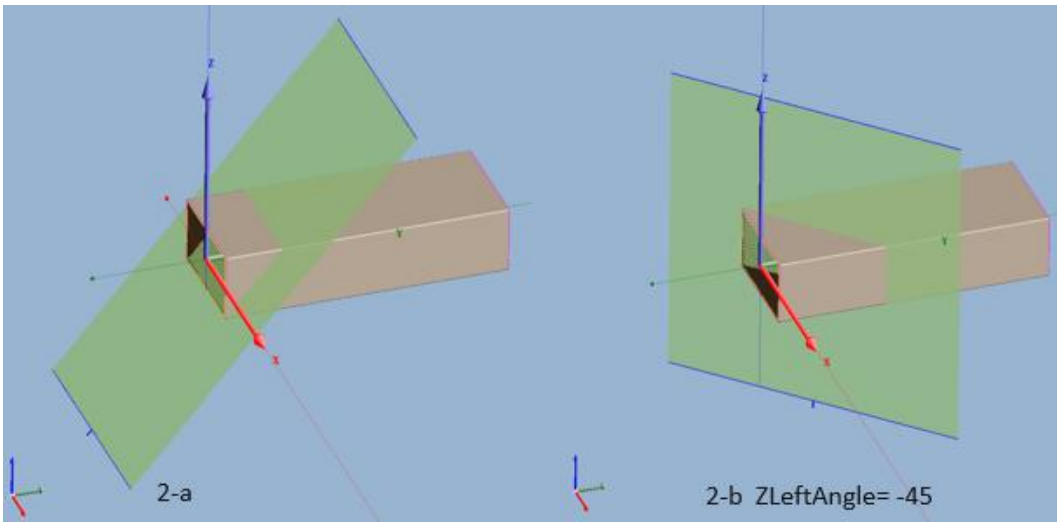

2.3 Technique Setting

2.3.1 Start Point

Start point is where laser starts cutting on a tool path segment. Click View > Display > Display Start Point will visualize start point by the dot of white color.

You can change a closed shape as 'Seal, Gap or Over' by 

. A closed shape by default is Seal-featured, means start and end point meet together. Gap means start and end point doesn't join together with a gap in between. Over is to add extra path at end point.

Click 

and point on tool path will define the start point of this segment, press ESC to exit the function mode. Click 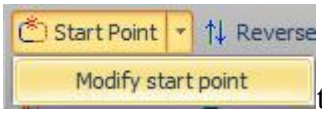

to unify the start point of all shapes located to near-end or far-end to Y=0 position.

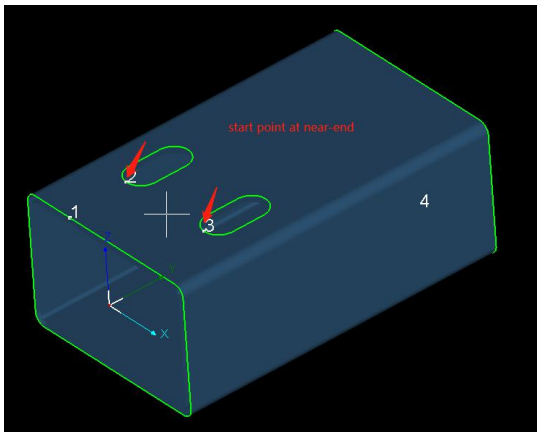

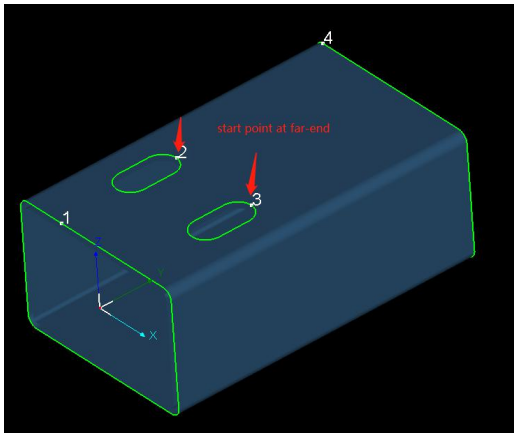

2.3.2 Cooling Point

Laser head will pause in cutting where added cooling point, meanwhile blow gas to cool down the heated material. Click 

and point on tool path can add a cooling point tag on part. Press ESC to exit the function mode. The gas blow duration of cooling point set in cutting control software on machine.

Select a cooling point and press Shift to delete cooling point. Click 

under ‘Clear’ drop down list will delete all cooling points.

2.3.3 Lead Line

Lead line can avoid burning trace left on start point by putting it on waste zone.

Select a whole part or a shape and click 

to apply lead line.

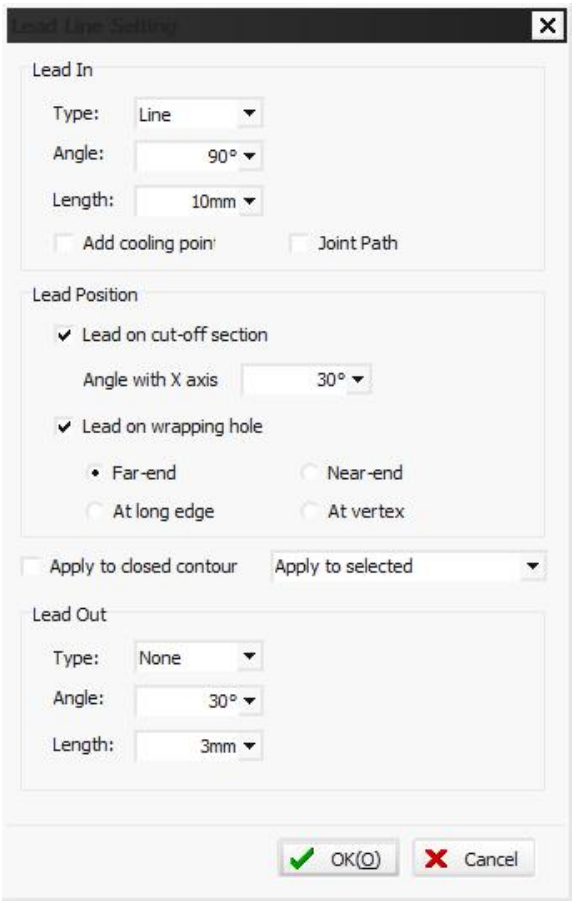

There are two types of lead line: ‘line’ and ‘line + arc’. Select 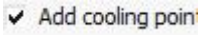

will apply cooling point at intersection between lead line and part path.

The lead line on wrapping hole and cut-off section should be set separately.

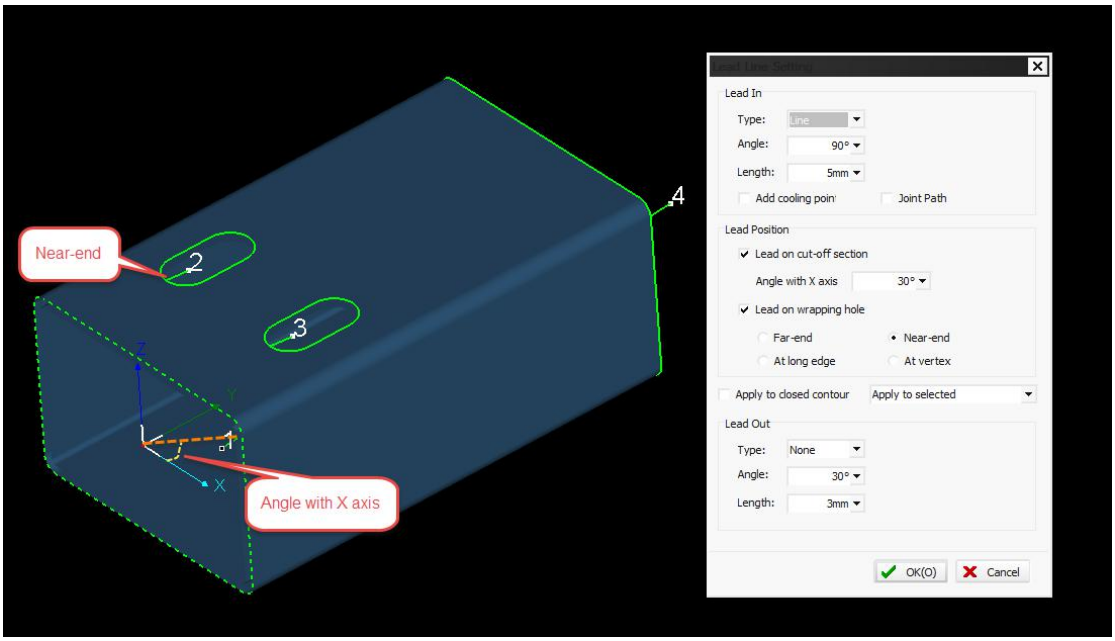

The lead position on wrapping hole can be near-end, far-end, long edge or vertex.

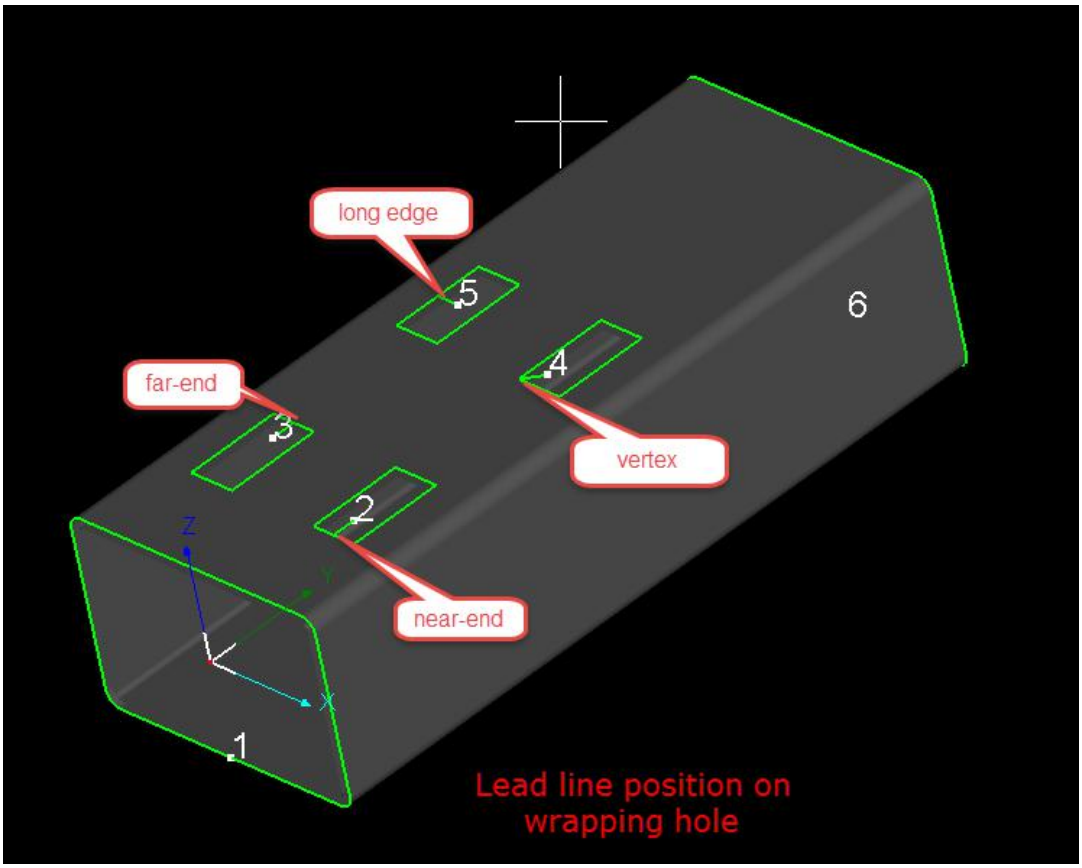

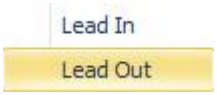

under **Lead** drop down menu is to introduce lead line from outside tube. The lead line introduced from outside tube usually applied to section steel like angle steel and U shape steel. For example, the cut section of below shape is a path of open contour, it should introduce lead line form outside part.

Click **Display** > **Highlight Lead Line** will highlight lead line in blue color.

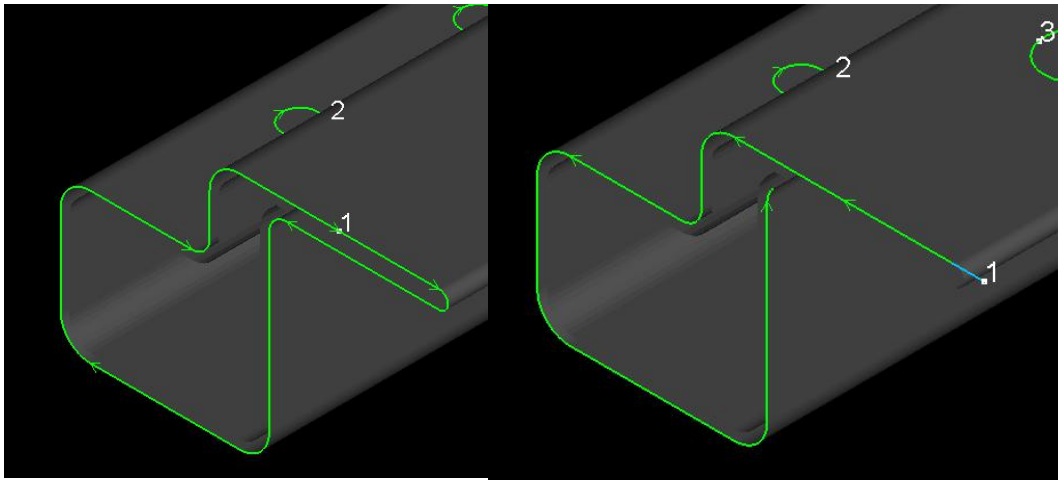

2.3.4 Kerf Compensate

The cutting size will be smaller than the design size for the material loss on parts edge burned by laser beam. Compensate is to offset the part design with kerf width and improve cut precision.

Click 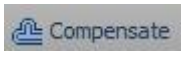

to offset the selected graphic or part.

Compensation usually is half value of kerf width. You can also choose which type objects apply to.

Expand and **Shrink** in **'Style'** option is the approach to offset tool path. ‘Shrink’ usually used on wrapping hole, ‘expand’ used on cut-off section, ‘auto’ means to shrink wrapping hole and expand cut section. For example, path in white color is the original design, path in green color is compensated path.

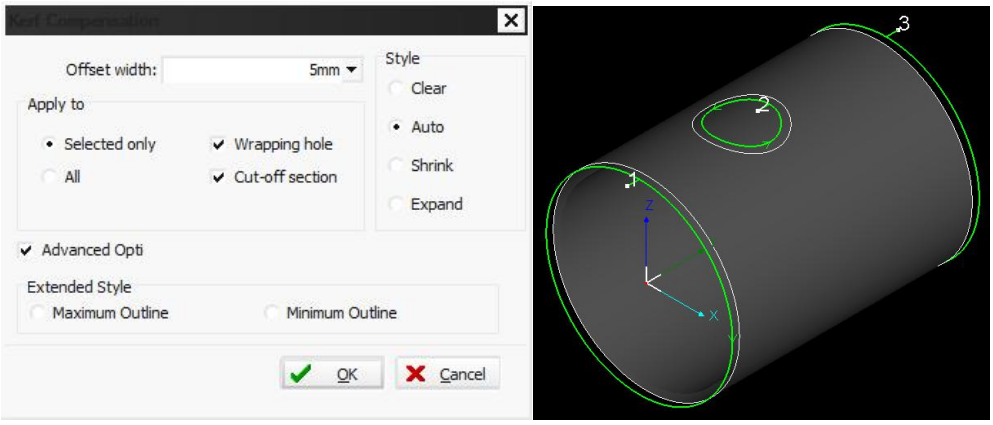

Select a shape and press short keys **'Ctrl + D'** or click **Select** > **Quick Compensate** to add offset without opening compensate dialog box.

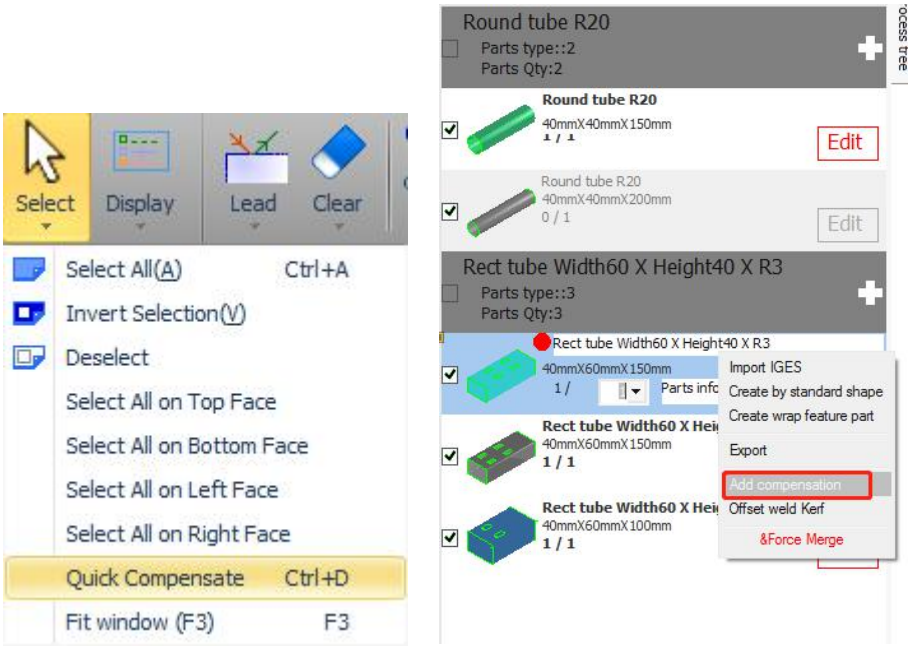

Select parts in part list, then right click part and click 

to add offset in volume.

It's suggested to compensate parts before nesting. Compensate nested parts might narrow part-to-part space or even interference tool path.

2.3.5 Extended Style

In ‘Kerf Compensate’ dialog box check 

will activate extended

style options.

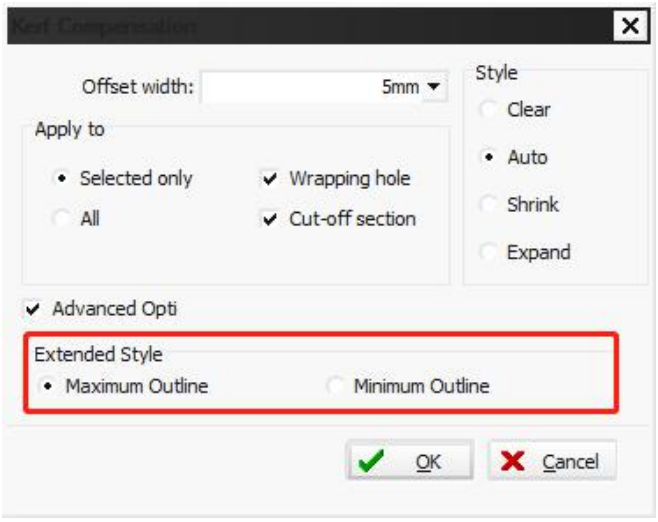

For the tilted intersect hole on tube, the contours on tube surface and inner wall is not in same vertical pane. While laser beam is vertical to tube surface and inner wall, hence the cut hole is smaller than designed size.

Illustrated in below photo, contour on tube surface is black color, contour in inner wall is blue color.

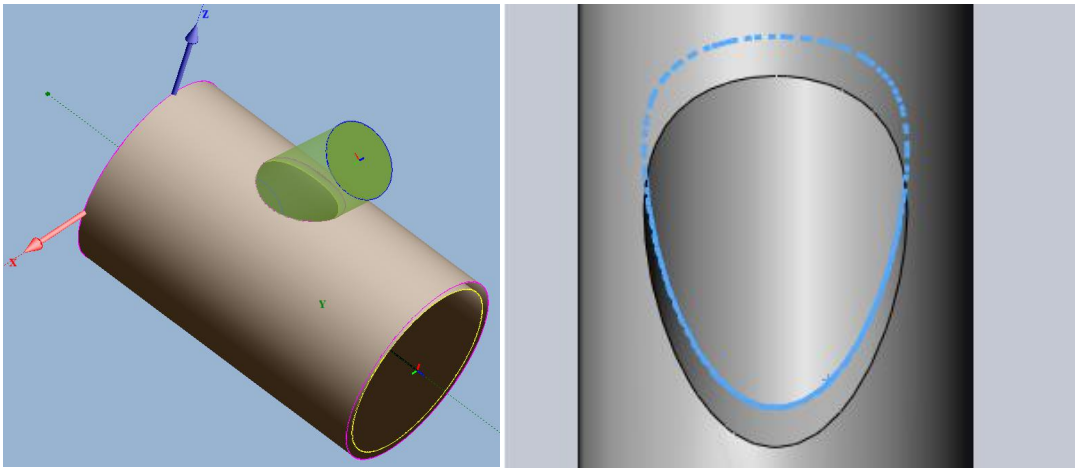

There are four methods to cut tilted intersect hole:

1. Preserve the contour on tube surface as tool path (default); 2. Preserve the contour in inner wall of tube as tool path (select shape and click 

in tool menu);

3. Merge the outline of both contours to create the largest shape to make sure branch tube can insert in (select ‘maximum outline’); 4. Merge the outline of both contours to create the smallest shape as tool path (select ‘minimum outline’).

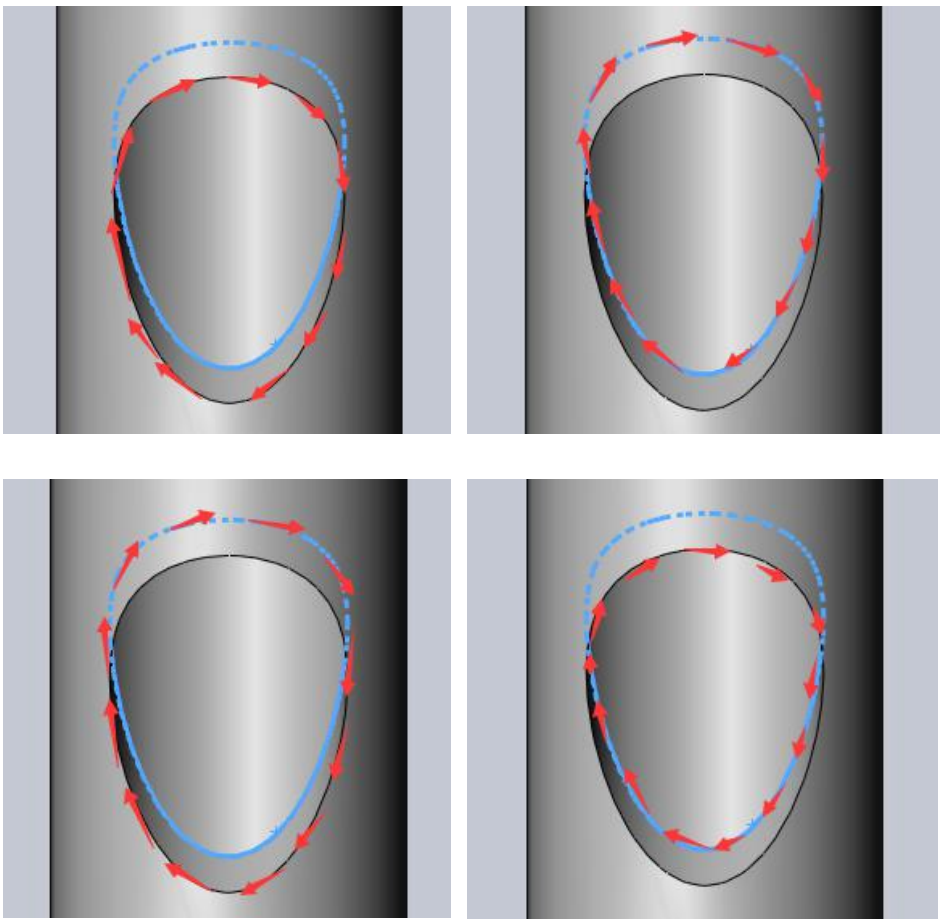

2.3.6 Micro Joint

Micro Joint is to leave a gap on tool path that prevent part or waste cut off falling and attach on main tube.

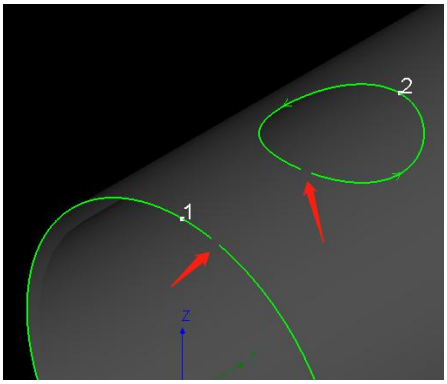

Click  to apply Micro Joint on part.

Press **Shift** and click on Micro Joint tag can delete it. Click Clear > Clear Micro Joint will delete Micro Joint on all parts.

2.3.7 Grid

Grid is to create cut line in grid pattern on in-part waste that split large waste to small pieces falling down.

Face Grid is to create cut line to holes in tube face; **Corner Grid** is to create cut line to holes on corner; **Manual Grid** is to manually drag cut lines to holes. The cut lines created by **Grid** are in blue color, grid lines will be cut first before hole's contour.

Click Clear > Clear Grid will delete grid lines on selected part or shape.

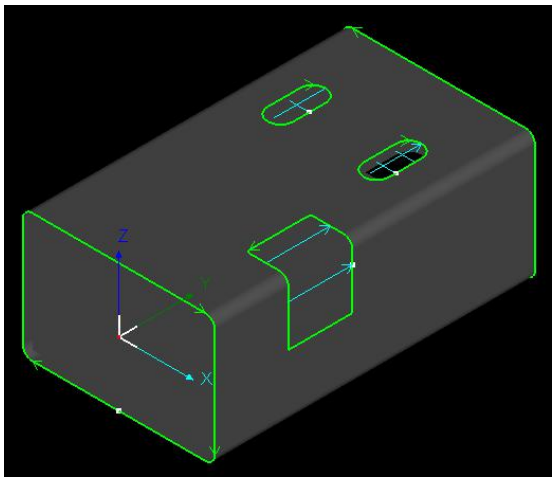

2.3.8 Delete

Click  will delete the original path or you can press **Delete** on keyboard.

If you delete all tool path segments of a part, this part still be counted in nesting results and report. For example, in below image, there are 4 parts contained. Then you

select one of them and click 

delete all tool path segments on it, this part still takes position on the tube and there are 4 parts counted in nesting and report.

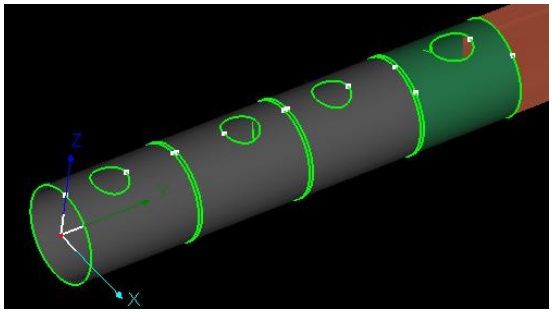
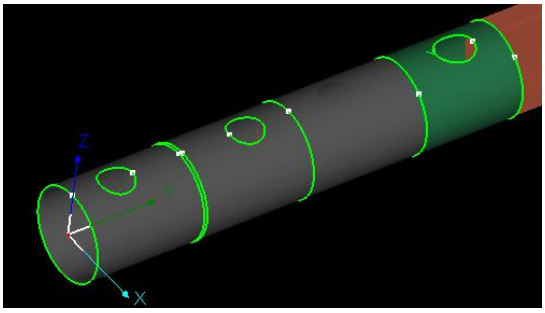

If you want to delete one of the nested parts on tube, click the part activate option box and click .

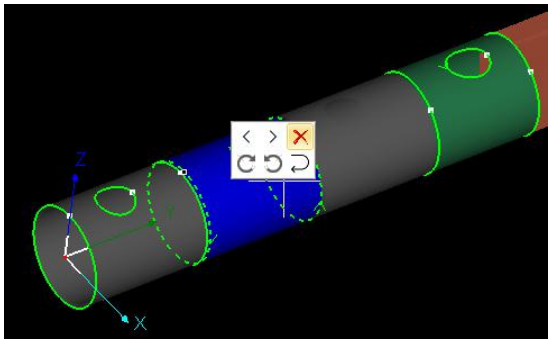
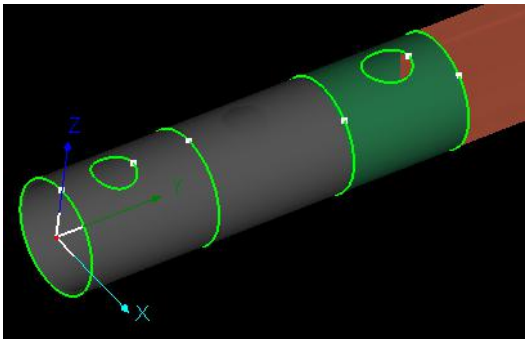

2.3.9 Clear

Clear is to remove the technique settings applied on whole part or graphic. Click activate the **Clear** function mode, the cursor will turn into a small white square. Point it on feature tags of lead line, cooling point, micro joint, compensate path, break grid etc., to delete applied technique. You can also select from ‘Clear’ drop down menu choose one specified technique feature to delete.

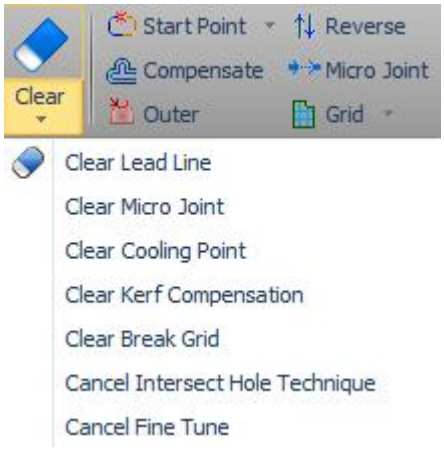

2.4 Advanced Technique

2.4.1 Intersect Hole

The hole dimension is not same in outer wall and inner wall by the nature of wall thickness if tube rotate in cutting, which cause intersect tube cannot fit in.

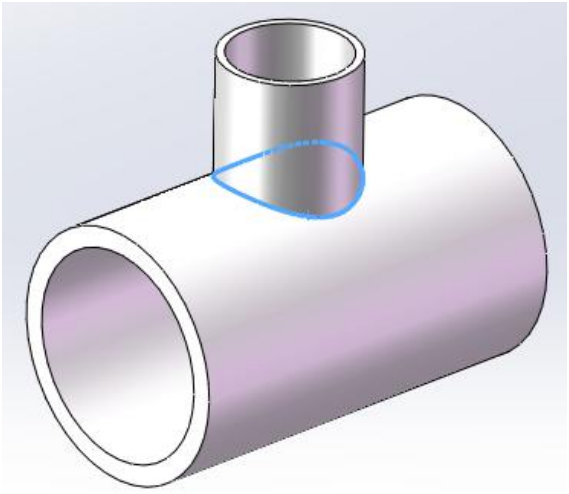

To make hole cutting fit for intersection, you have to apply '**Intersect Hole**' technique, by which tube doesn't rotate in hole cutting on curve surface.

Intersect hole technique has three styles. Click 

directly, the intersect hole cutting vertical to its unfolding 2D pane, usually applied on round tube. Under drop down menu there are another two options. Select '**Horizontal**' the intersect hole cutting horizontal to YOZ pane, select '**Vertical**' the intersect hole cutting vertical to

XOY pane.

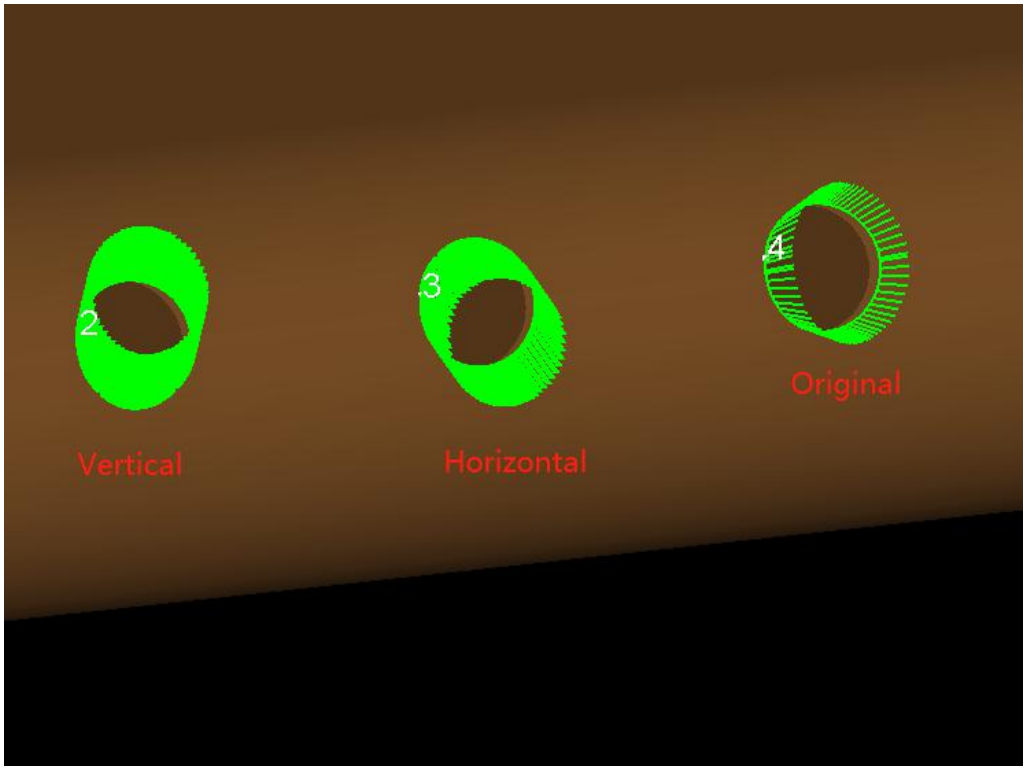

In above part, tube stays still in XOY pane in cutting figure 2, the 3D geometry vector indicates the direction of laser head towards tube surface. Tube will rotate 90°CCW, then stays still in cutting figure 3. The 3D geometry vector in shape 4 pointing in all direction along curve surface, tube will rotate in shape 4 cutting.

The shape applied intersect hole technique will have wider outline, and you can also tell the difference by vector direction.

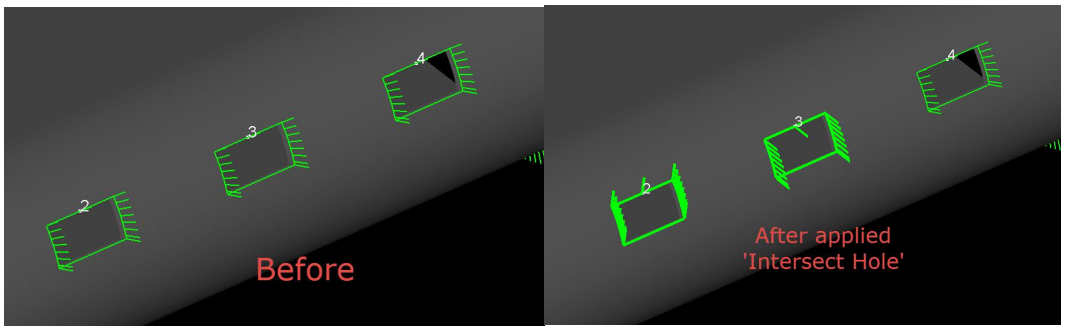

2.4.2 Inner Wall Contour

There are two contours for one graphic on tubular part by the nature of wall thickness. Leave contour on outer or inner wall as cutting path will get different cutting size.

By default TubesT will keep contour on outer wall as tool path, you can click 

to keep contour in inner wall as tool path. If you have selected to keep inner contour when import drawing, you cannot convert it to contour of outer wall. If you have selected to keep both contours when import drawing, you have to manually delete extra tool path only keep the ones needed.

Click an option in drop down menu can revoke inner contour setting.

2.4.3 Weld Kerf Compensate

The cut off section of tubular part is always vertical to XOY pane of machine axes, because the tube is heading along Y direction and laser beam is heading towards Z axis. The common laser machine not able to cut a bevel face of the part in below design, thus the parts not able to joint together in later welding process.

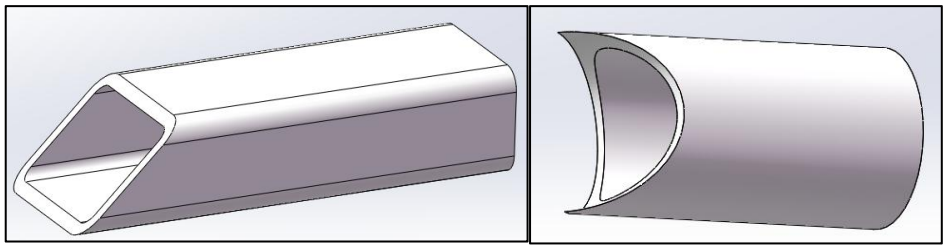

Select part section and click 

software will offset the tool path automatically which make it fit for welding joint.

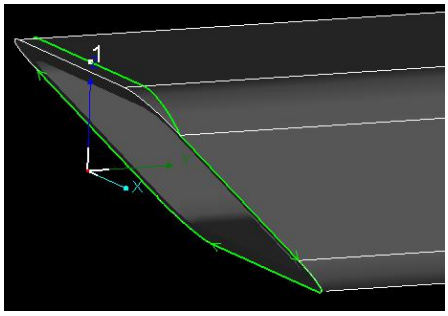

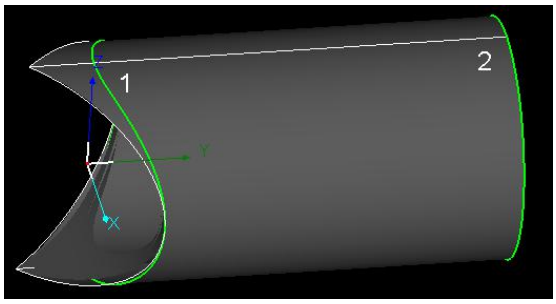

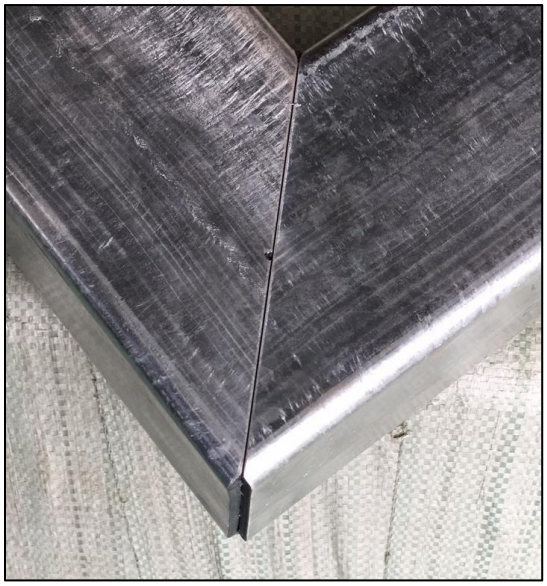



'Weld Kerf' can also be used to offset tilted cut-off section of U channel steel.

Below are modified tool path by 'weld kerf' of U channel.

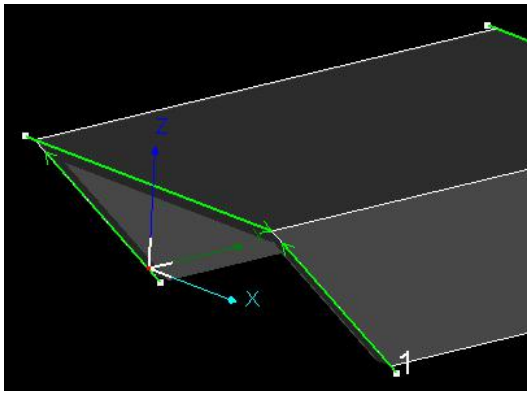

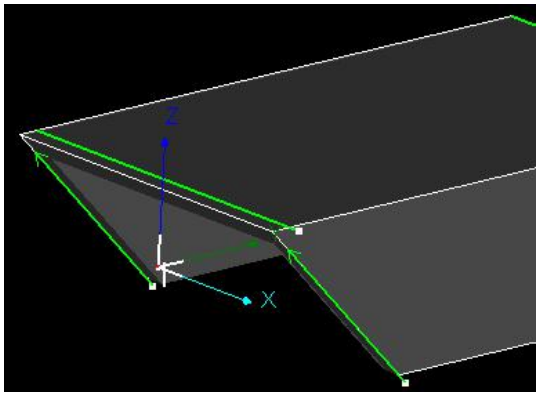

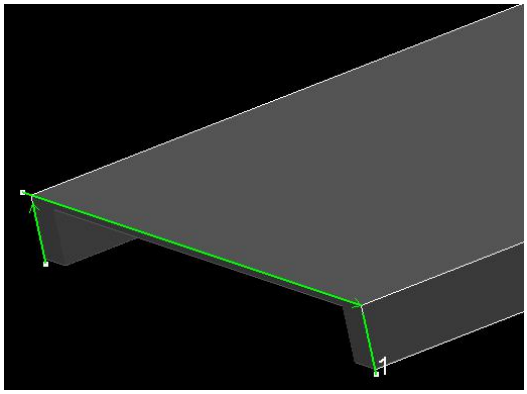

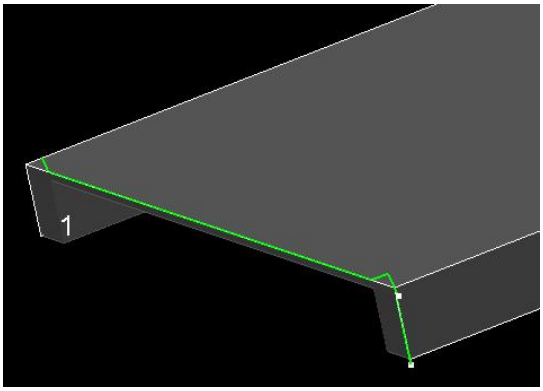

Click Offset all sections in drop down menu will offset all cut-off sections in edit window. Click Cancel all will delete applied weld kerf compensation of graphic in edit window. Also you can select unnested parts in part list then apply 'weld kerf' compensation in volume. Right click and select Offset weld Kerf.

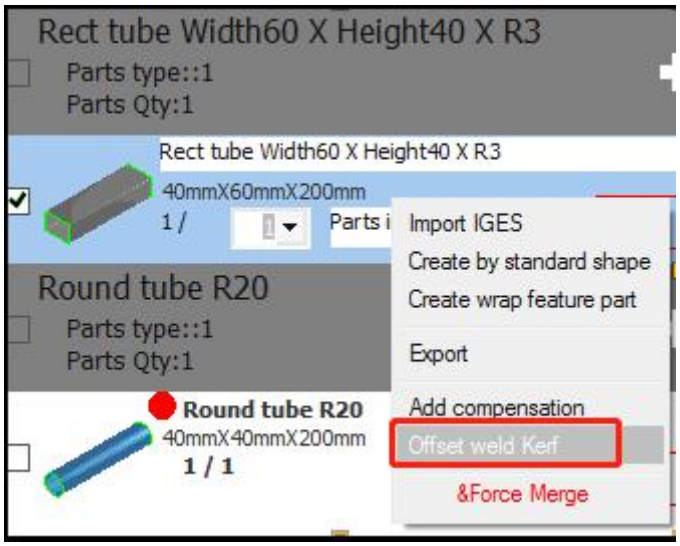

2.4.4 Profile Path

Profile Path is to modify the tool path for profile steel of L shape, H shape, C shape etc., for the cut off section is different from closed shape.

When import file of profiles, select Section steel ✔ L/C profile software will create tool path and lead line for this type of parts.

Below images demonstrate the tool path of H and U channel.

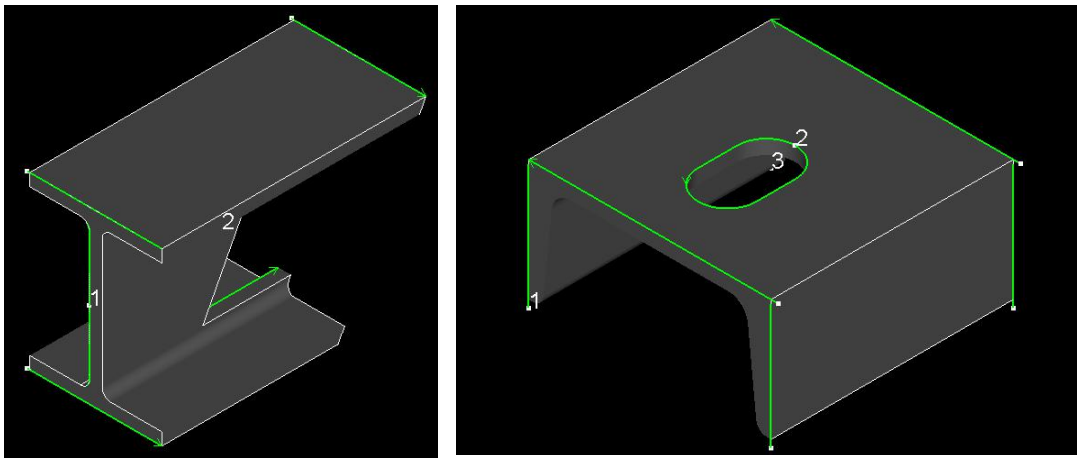

The tool path segments on cut-off section cannot change in edit window.

Select the section and click 

open 'profile edit' window where you can modify tool path of single segment.

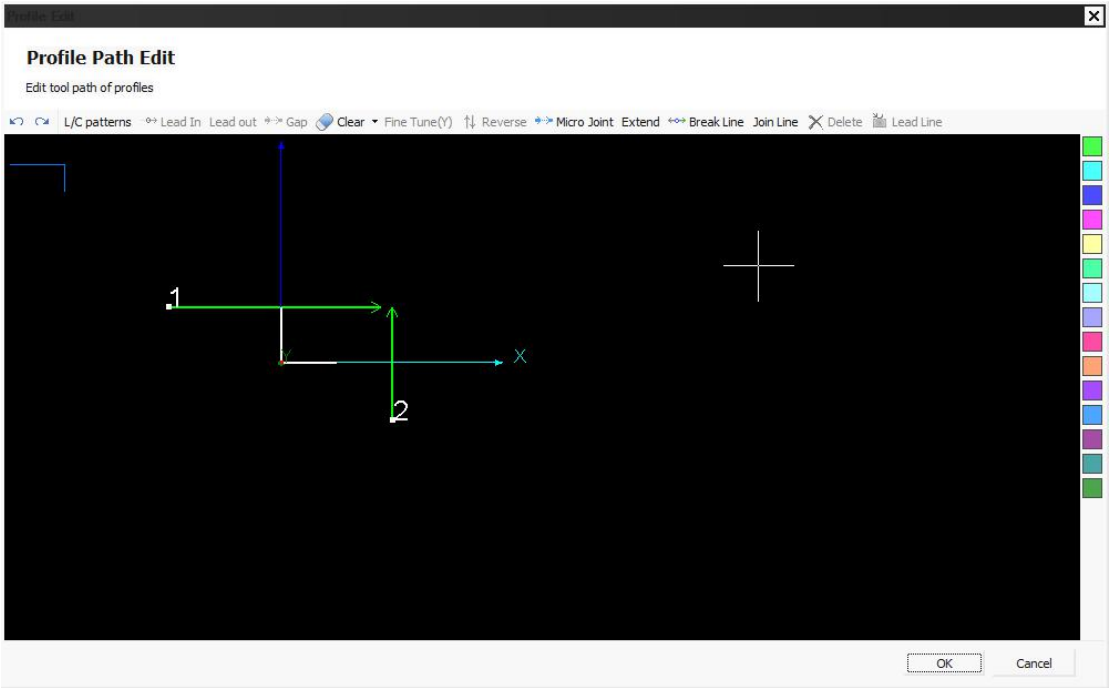

'L/C patterns' can change tool path sequence of L/C type section. In below image is the default tool path sequence of C type section. Click ' ' you can change the tool path sequence to the pattern in below image.

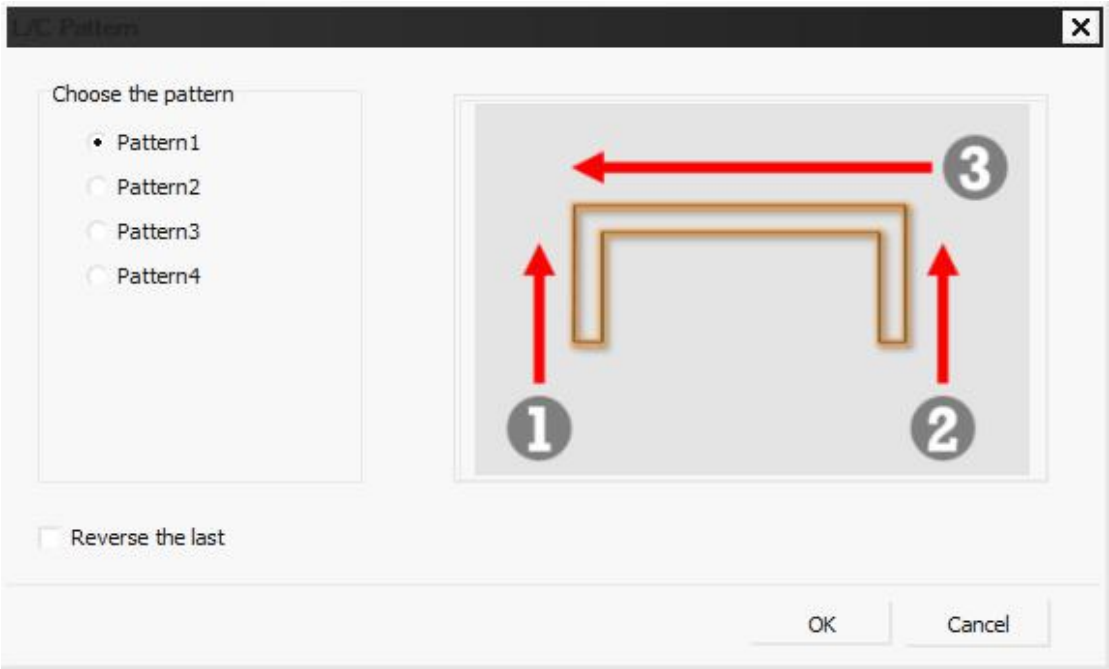

'Fine tune' is to move selected tool path towards X/Y direction in precise distance to adjust cutting. For example, you can adjust tool path from left image to right image below

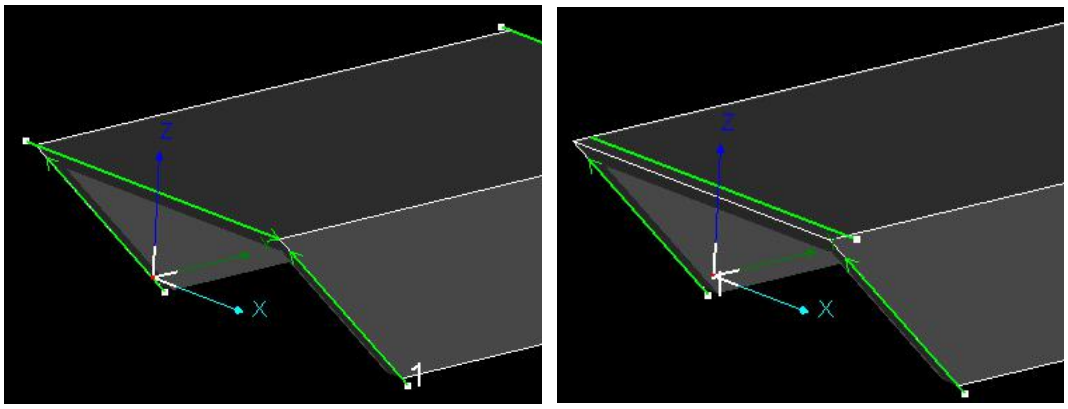

2.5 Modify Design

You can modify part design by 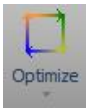

and some other CAD tools in TubesT.

2.5.1 3D Vector

Click 

open vector edit window to modify 3D vector of profile.

Laser head will collide with groove surface of free form tube if the part geometry not modified till it's fit for cutting. The original 3D vector in profile in below image.

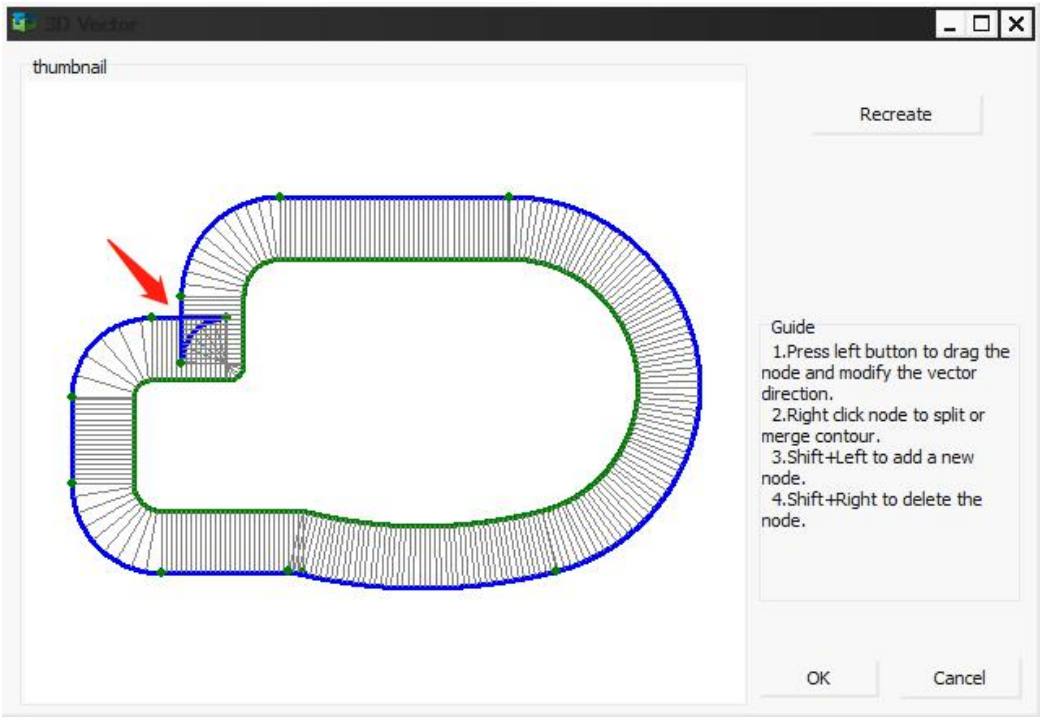

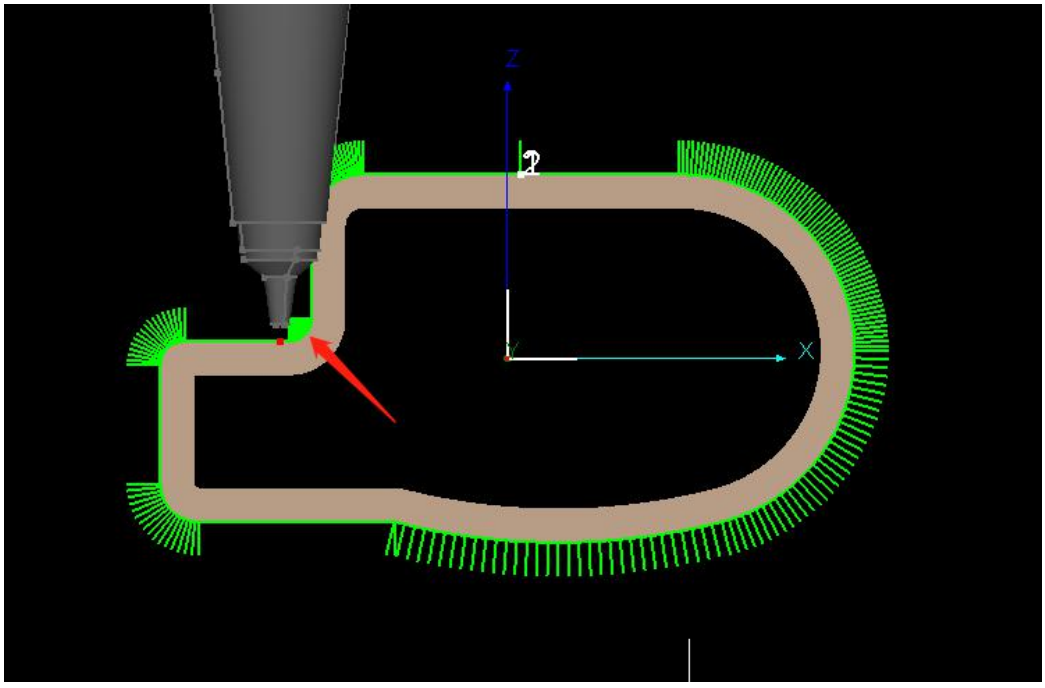

Click on profile add a node, then drag the node to change the vector direction.

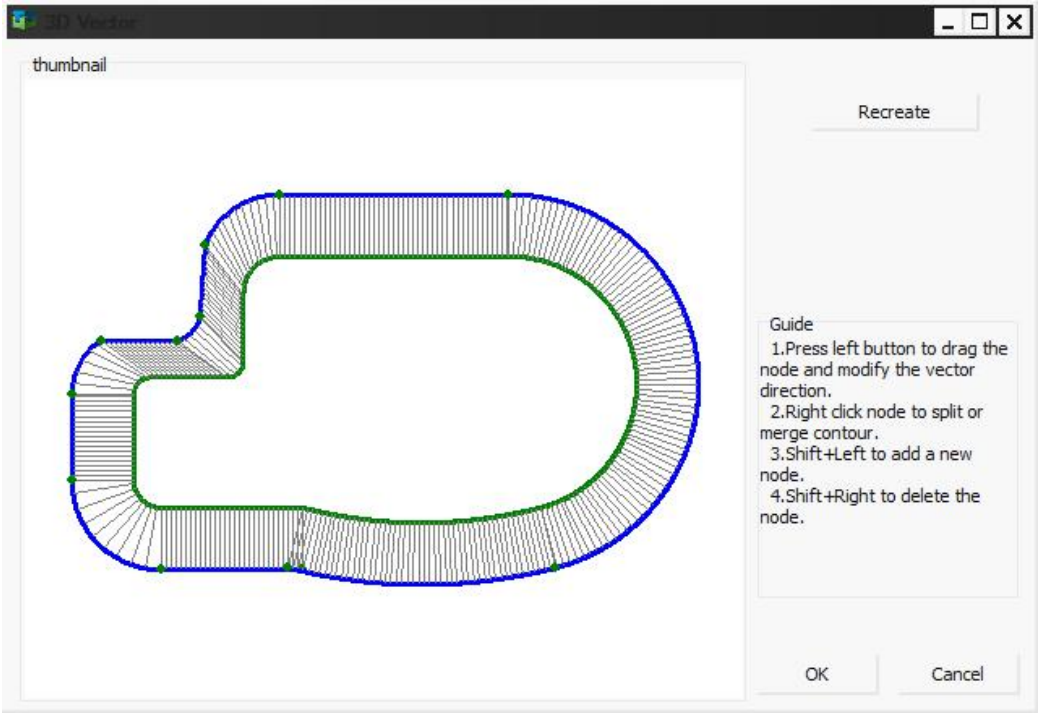

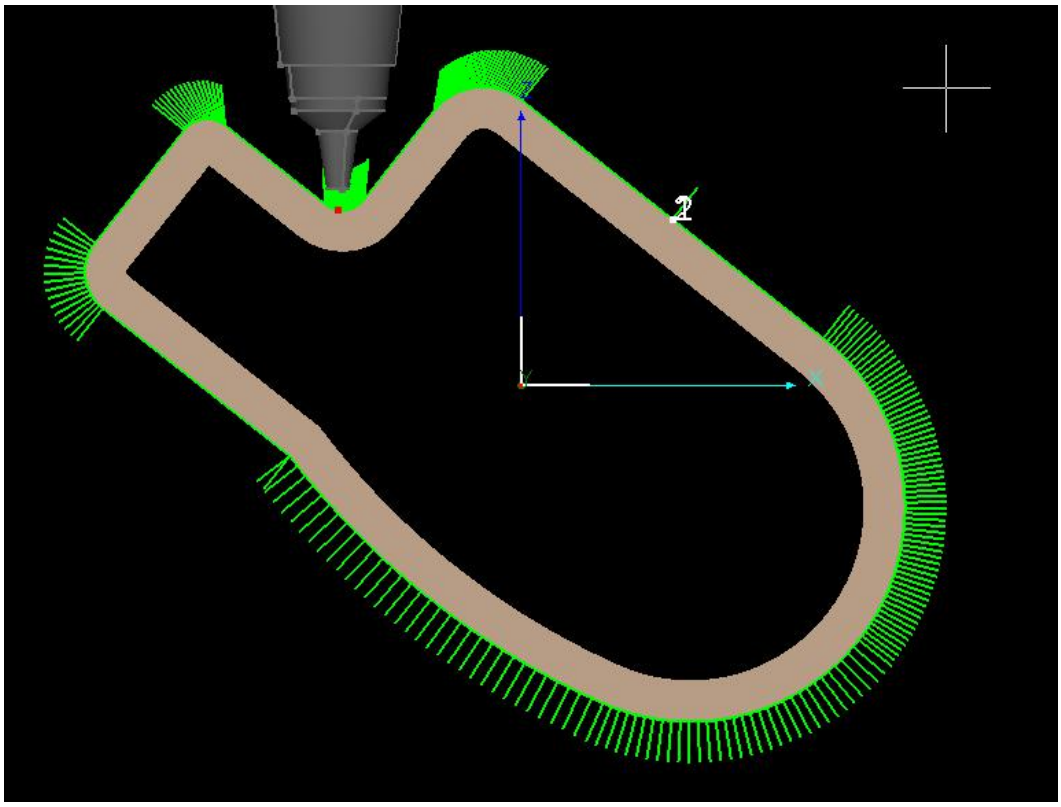

For more details please refer to related article 'how to modify profile vector’.

2.5.2 Rotate Section

For free form profile you have to make sure the tube face clamped in machine is in same direction with drawing in the software. Click 

to adjust tube face direction in software same with clamped tube.



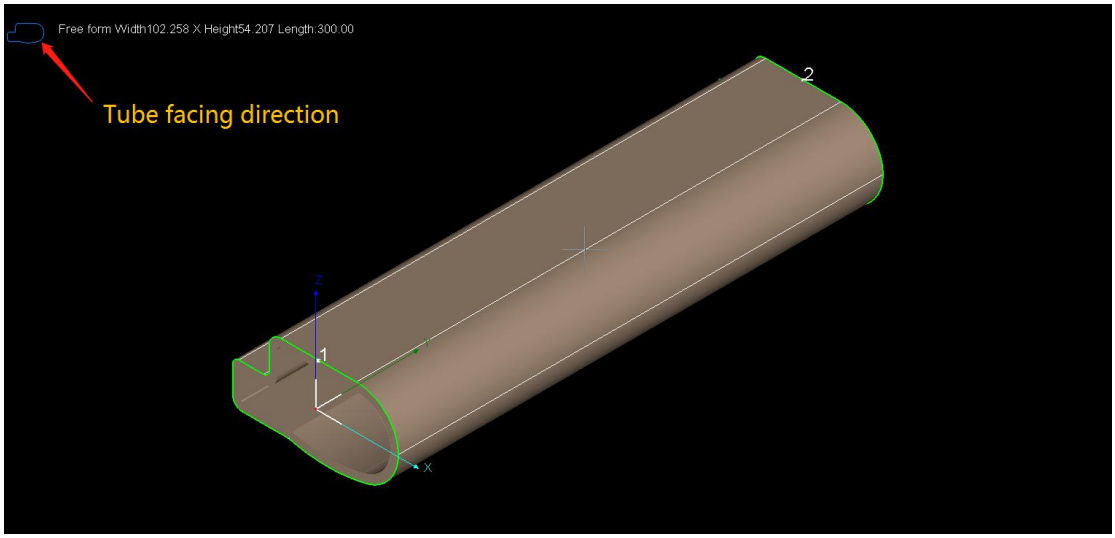

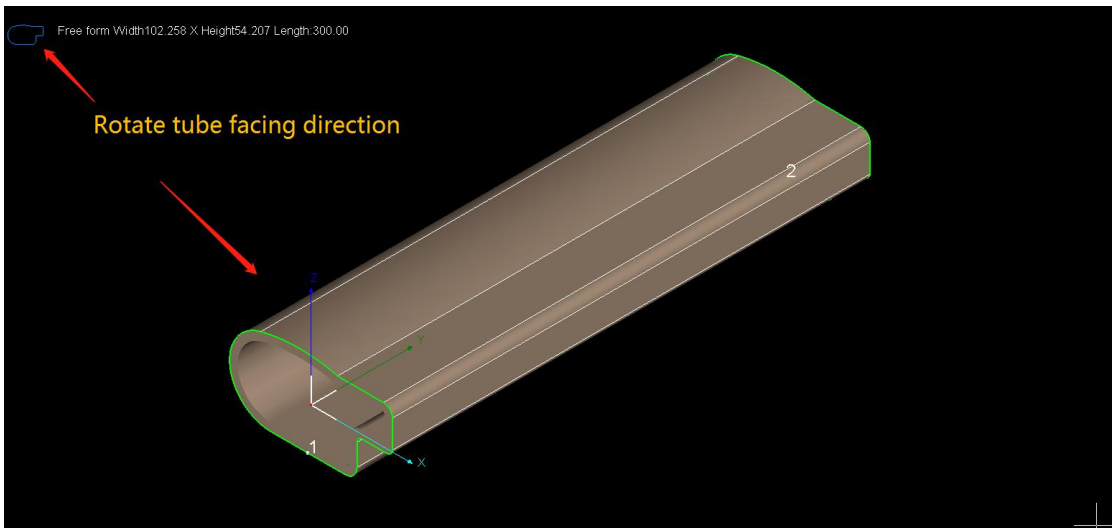

2.5.3 Break Line

'Break Line' will break one path segment into multiple segments which allows user to modify tool path of different position in one profile separately.

2.5.4 Join Line

'Join Line' is to join multiple line segments as one by given tolerance. For example, there are 3 line segments in below image, laser machine will locate and pierce on each line segment. After join 3 line segments as one, laser only locates and pierces one time on start point.

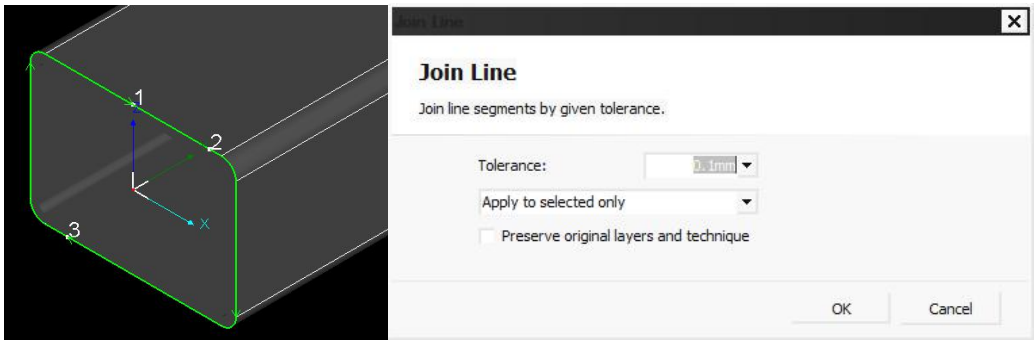

When join line segments, it's optional to preserve the layer and technique setting of each line segments.

In below tubular body, the curve position to intersect branch tube needs to apply 'Intersect Hole' technique to change 3D vector direction.

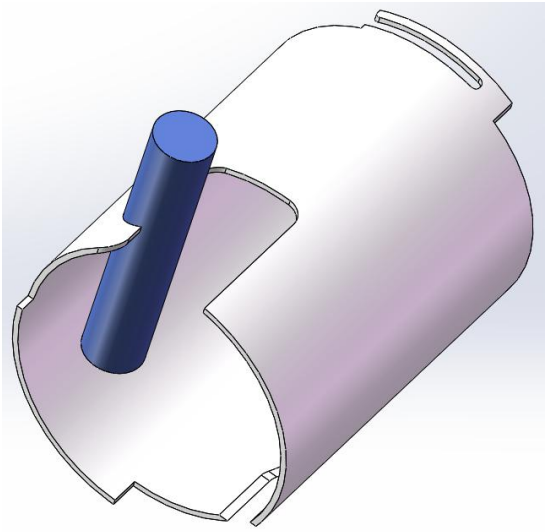

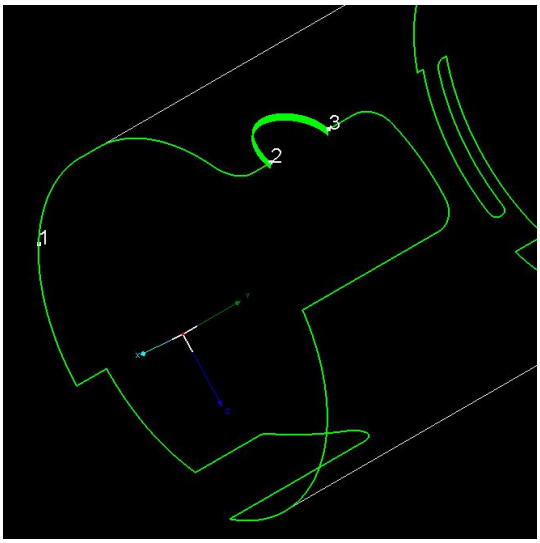

Cutting in this curve has to go deeper than other, it's applied separate layer to set cutting parameters (slower speed for example) to make sure laser cut through material.

Join these three tool path segments as one in last step.

Cutting begin at start point 1 will execute piercing, then finish cutting of whole contour without lifting, while the technique(speed, power etc.) executed at curve position is different.

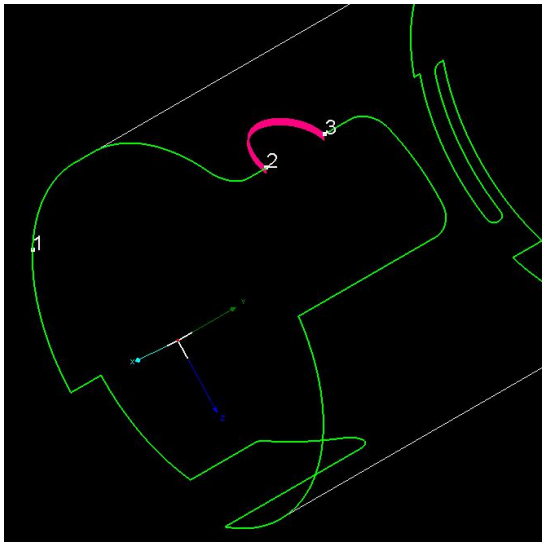



2.5.5 Draw Wrap

'Draw Wrap' is to draw graphic wrapping on tube face.

Cursor will grip the nodes on graphic. To make sure wrapping graphic in precise position, you might need to draw small positioning hole on tube face then delete them after finish wrapping graphic.

To cut the facet part from tubular body in below image, you need to array the wrap holes and draw the positioning holes on tube face first. Then connect positioning holes to create tool path and delete positioning holes after finish drawing.

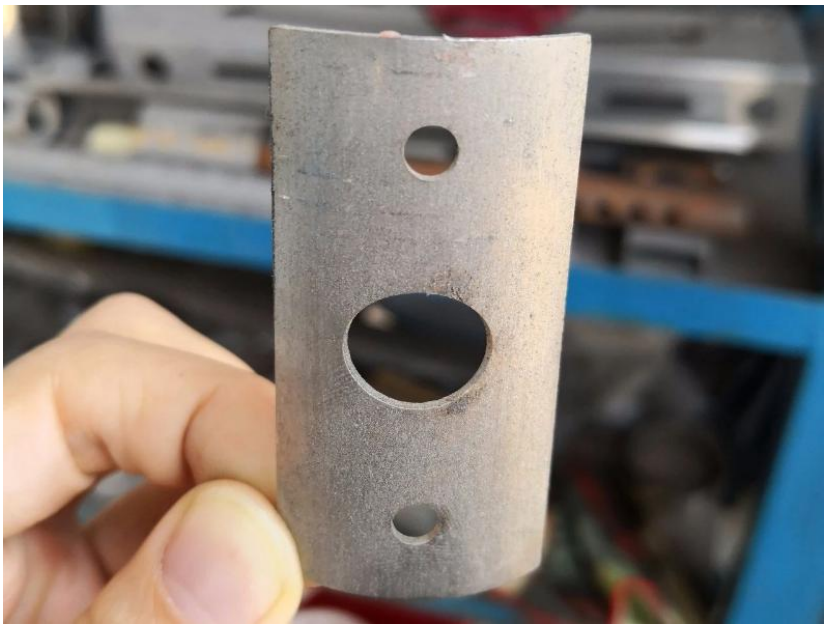

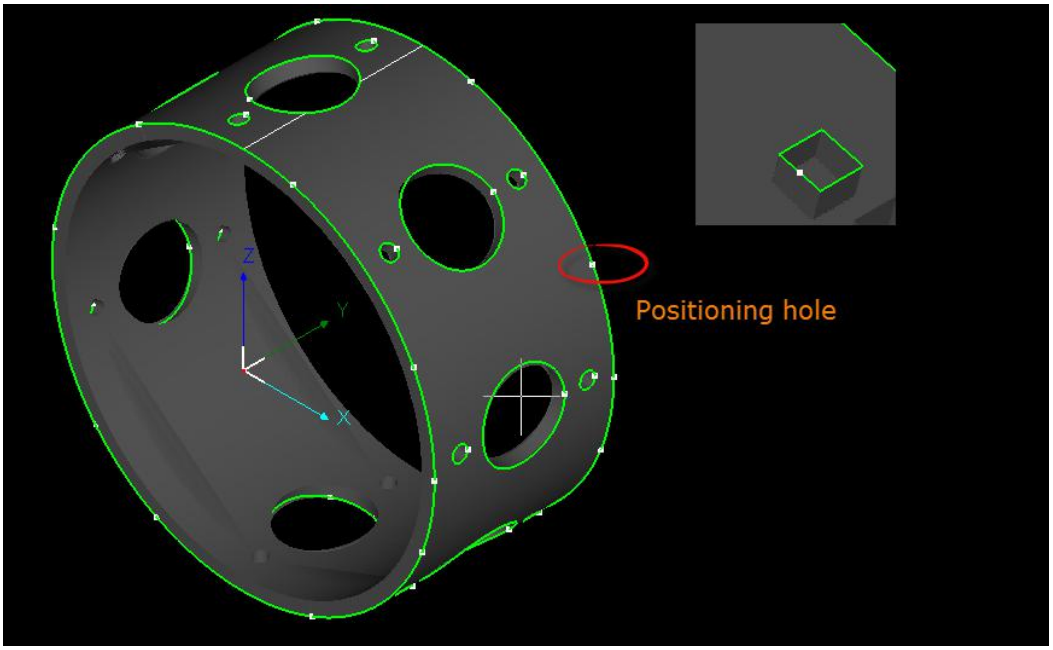

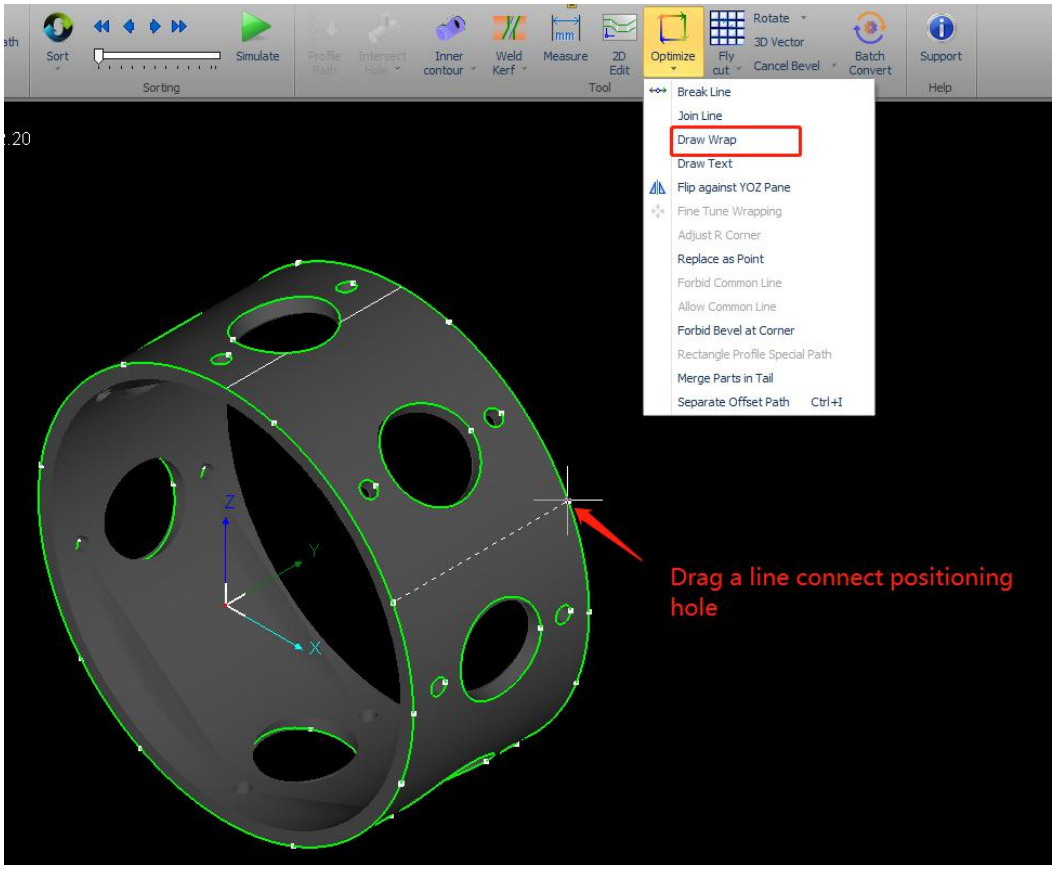

2.5.6 Draw Text

You can add hollow text or line text (text font file format *.shx).

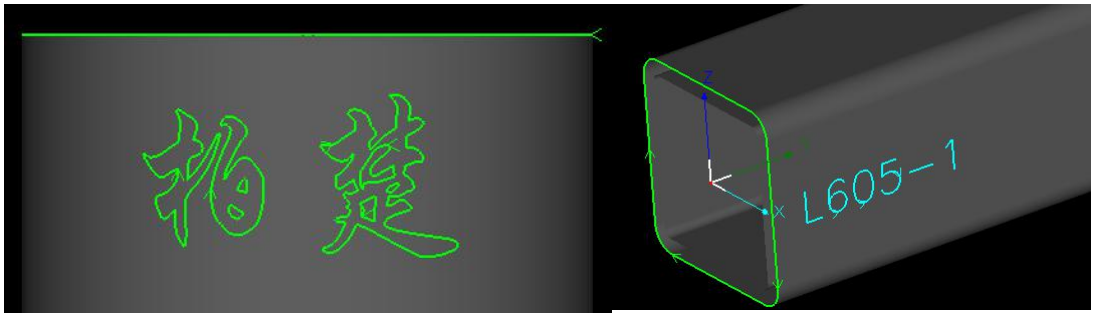

If you need to mark number on parts for sorting and picking after production, draw number with another layer, then input marking parameters to this layer in TubePro cutting software.

2.5.7 Flip against YOZ Pane

Flip the part design against YOZ pane.

2.5.8 Fine Tune Wrapping

Adjust wrapping graphic in X/Y direction by given distance.

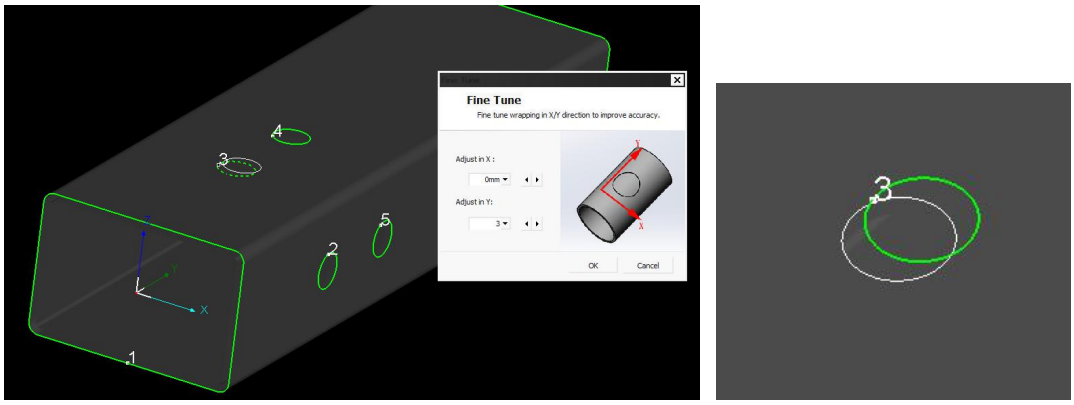

2.5.9 Adjust R Corner

'Adjust R Corner' allows user to adjust round corner radius within ±3mm when there is difference between drawing and tube.

Take notice that this function only changes cutting path, doesn't change dimension of original drawing. For example, the original part dimension of drawing is 40*40 in width and 3mm in corner radius, change radius to 4mm by 'R Corner Adjust'

only change the cut path as 4mm radius while the drawing remains as 4mm radius.

2.5.10 Replace as Point

'Replace as Point' used to replace the small graphic as a piercing point. Like below image, the original graphic (circles) turn to white and replaced as piercing point in center.

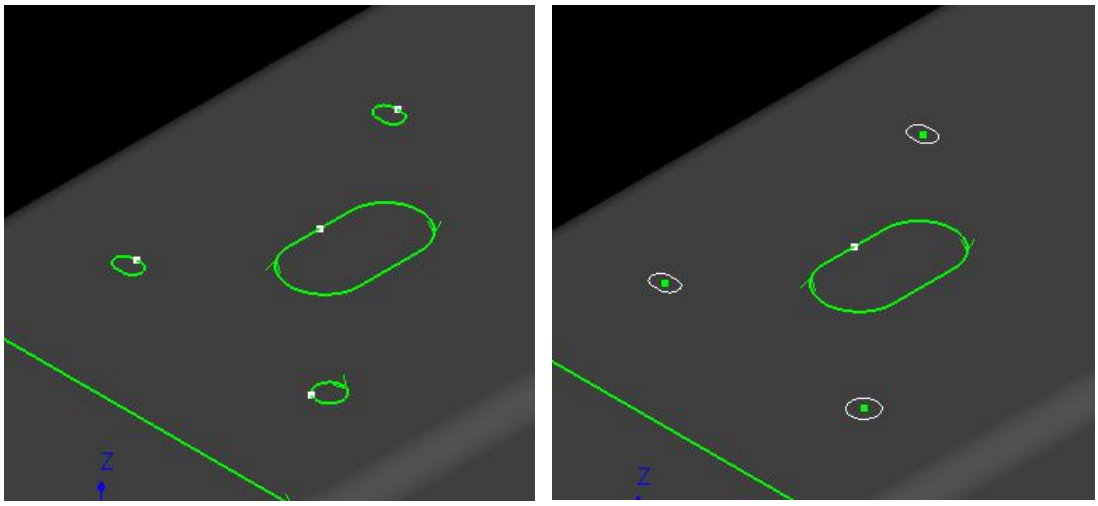

2.5.11 Rectangle Profile Special Path

For the square /rectangle profile of sharp corner, it's hard to cut through. Select part and click ' ' will create special tool path in four segments like in image below.

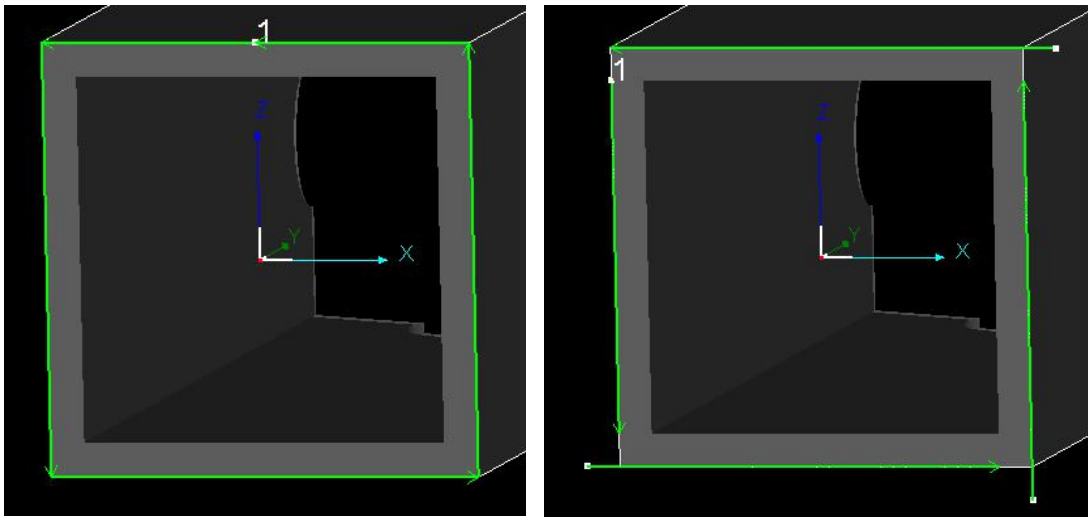

2.5.12 Separate Offset Path

'Separate Offset Path 'is to separate offset path dependent from original path.

This function used for parts need both weld kerf offset and break line operation. The right steps are to apply weld kerf offset first, separate offset path from original path, then do break line operation.

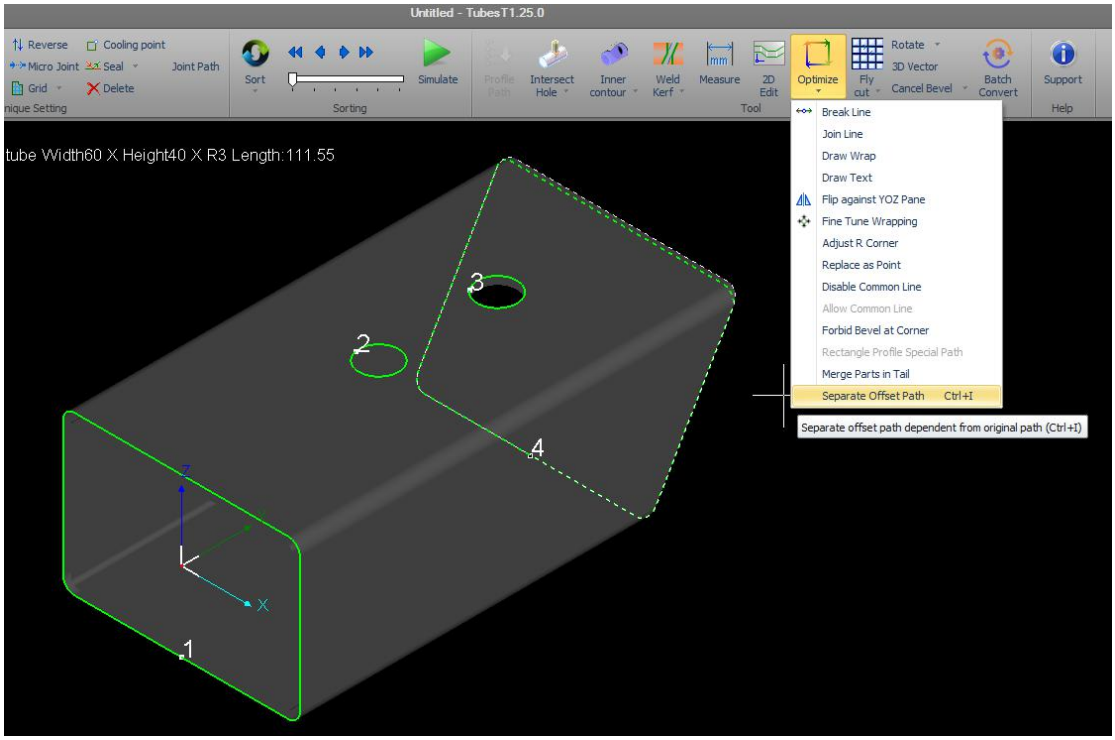

2.6 Nest

2.6.1 Common Line

1. Identical match

'**Identical match**' used to create common line between two shared cut-off sections perfectly match.

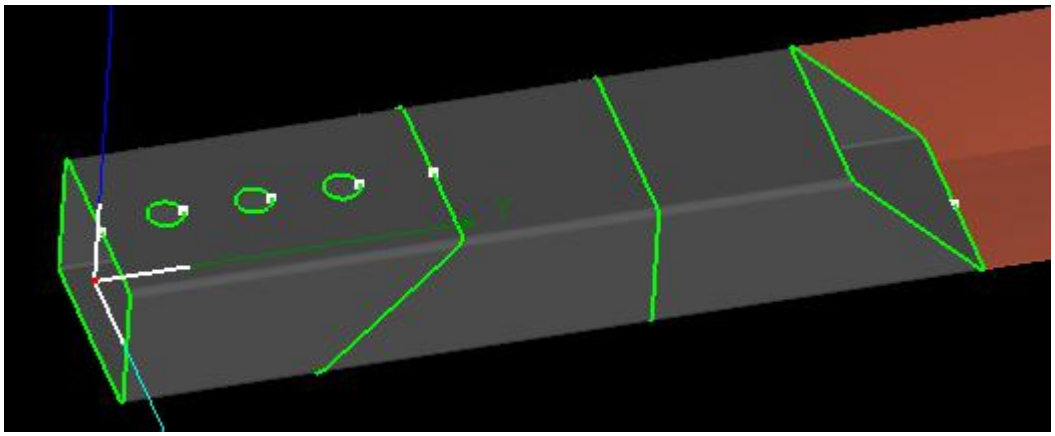

2. Weld Kerf Offset

'Weld Kerf Offset' used to create common line for parts applied weld kerf offset like below.

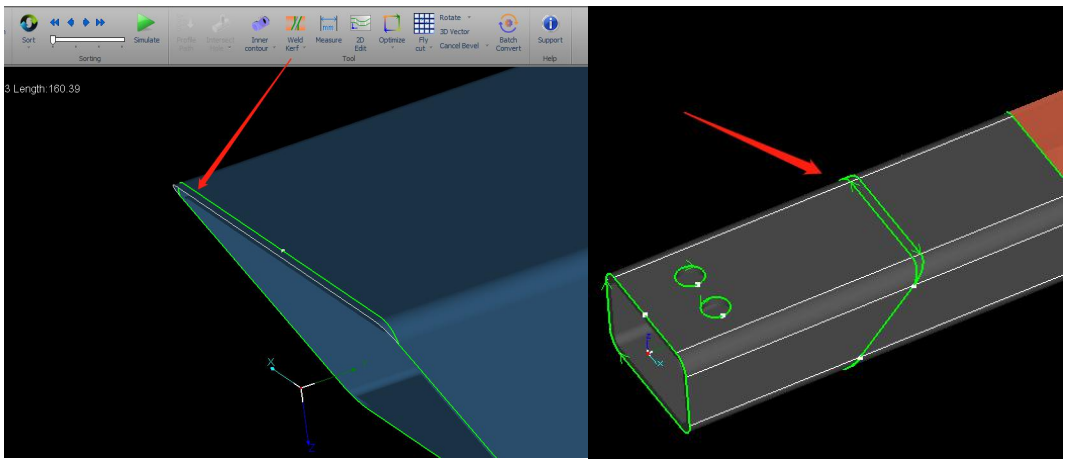

Simulate common line tool path you can see the cutting contains 3 segments marked by red, yellow and blue in below image. The default sequence is red →blue →yellow. If you select 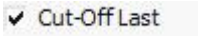

the cutting will follow red →yellow → blue.

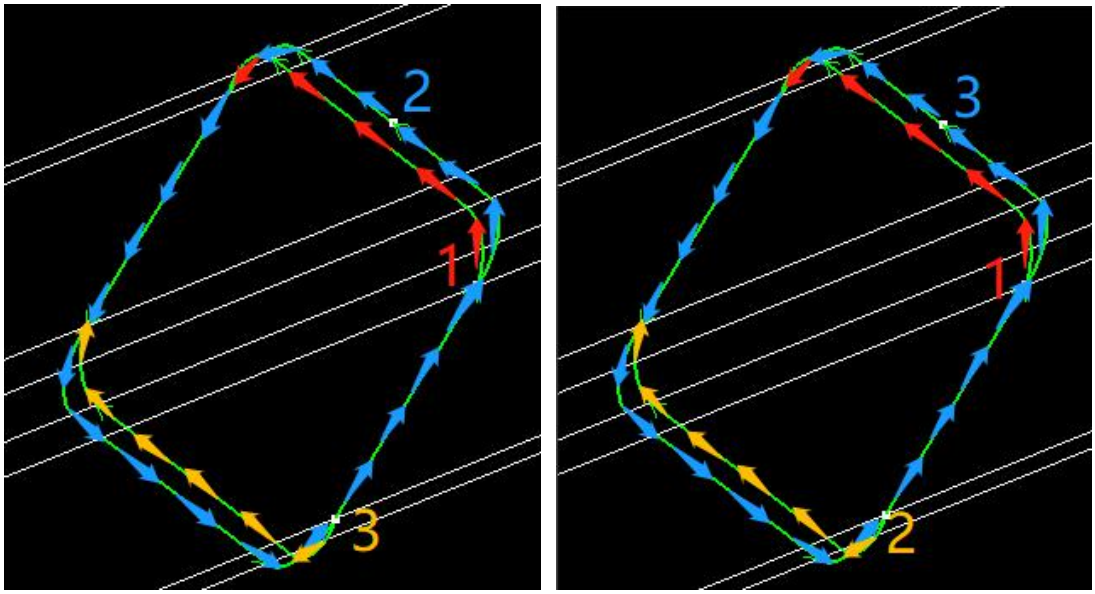

3. Island Type

If there exists a waste zone on common line of two parts, it's called **'Island type'** in TubesT.

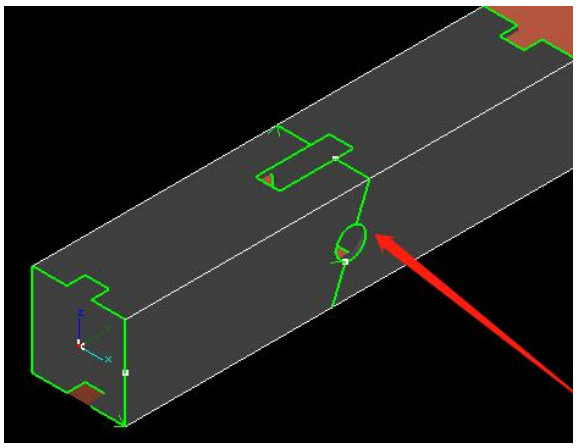

There are different approaches to create 'Island type' common line: continuous cut, 3-segment cut and single part cut.

You can simulate common line tool path in 3D dynamic view. Select part or graphic and click 

to simulate tool path.

4. Forbid Common Line

Before nest parts, you can select cut-off section of parts and set as ' ' in 'Optimize' options. These sections will not be merged as common line in auto-nest. Other sections are available for common line nest.

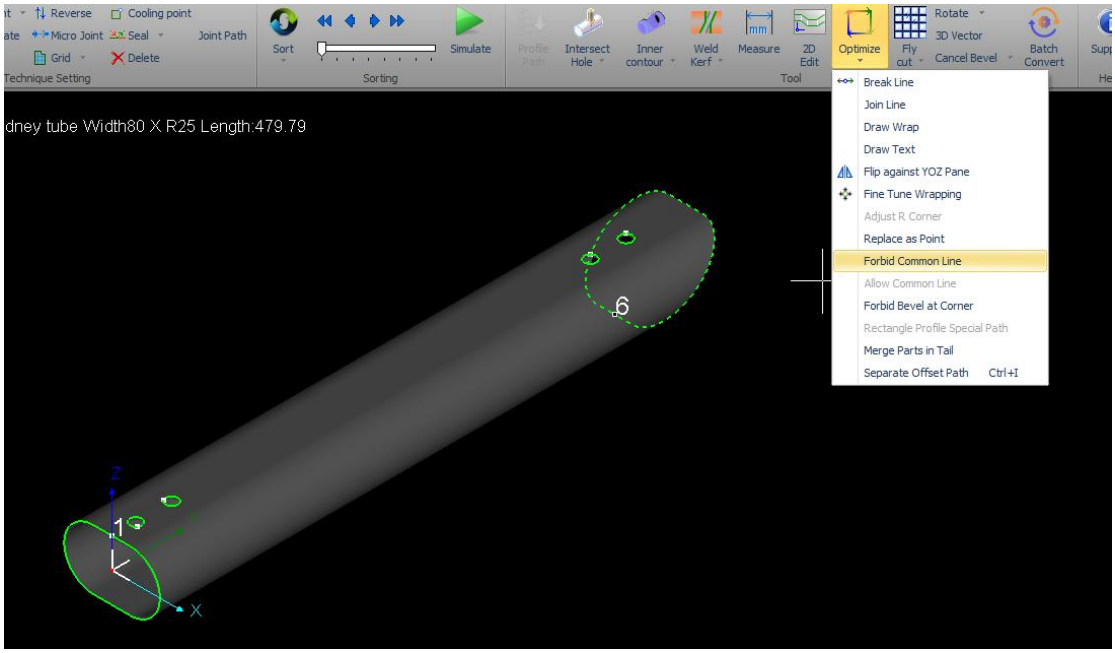

There is a situation that waste zone in common line is too large, before cut the last segment common line the part body will fall from gravity for lack of attachment.

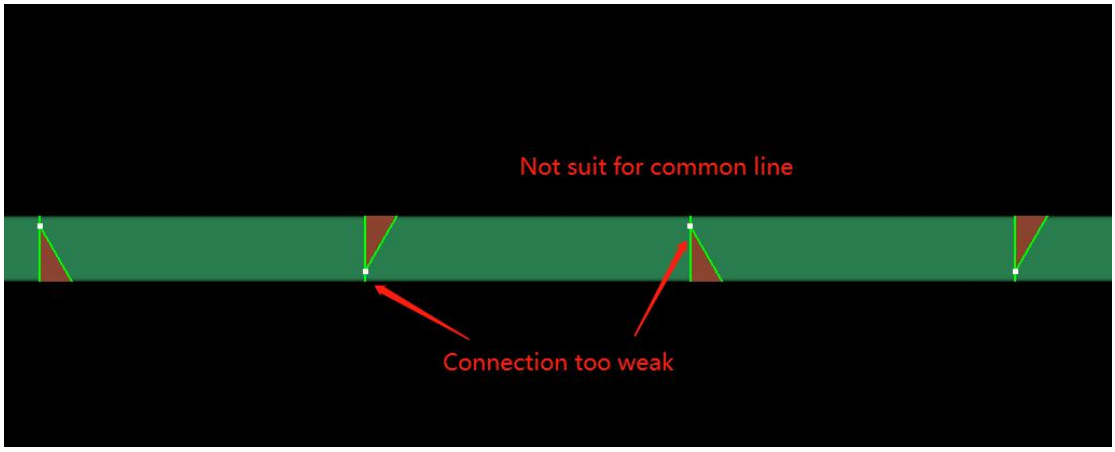

Disable this section merge common line in nesting can prevent the problem.

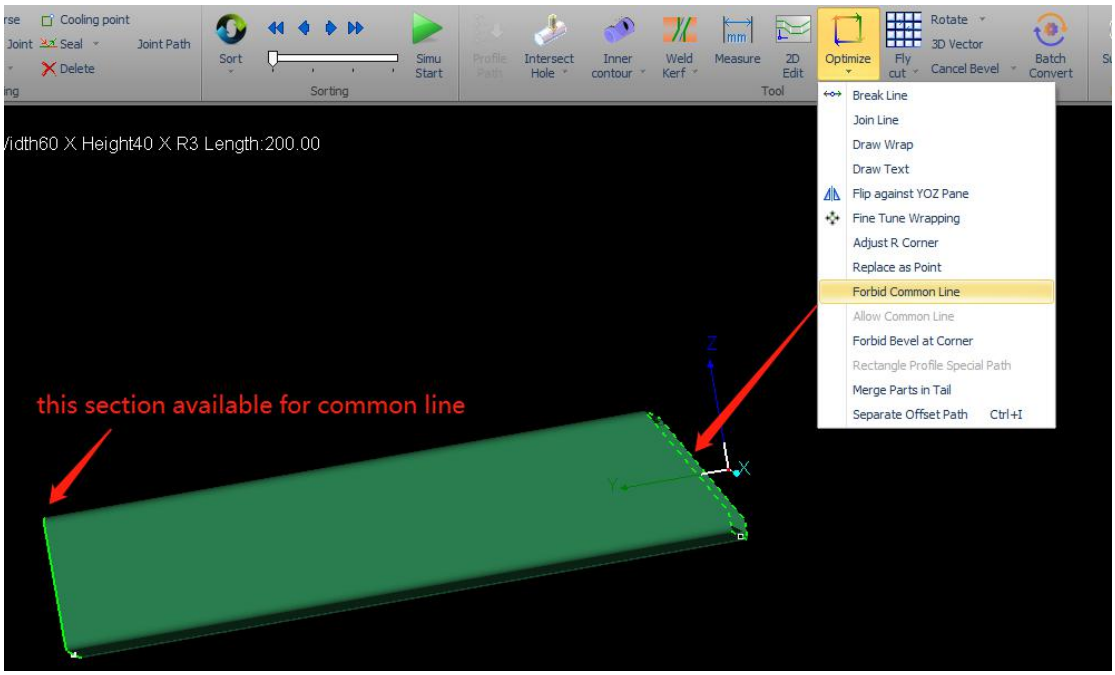

2.6.2 Auto Nest

After finish modifying part design, click 

open 'Auto Nest' dialog box.

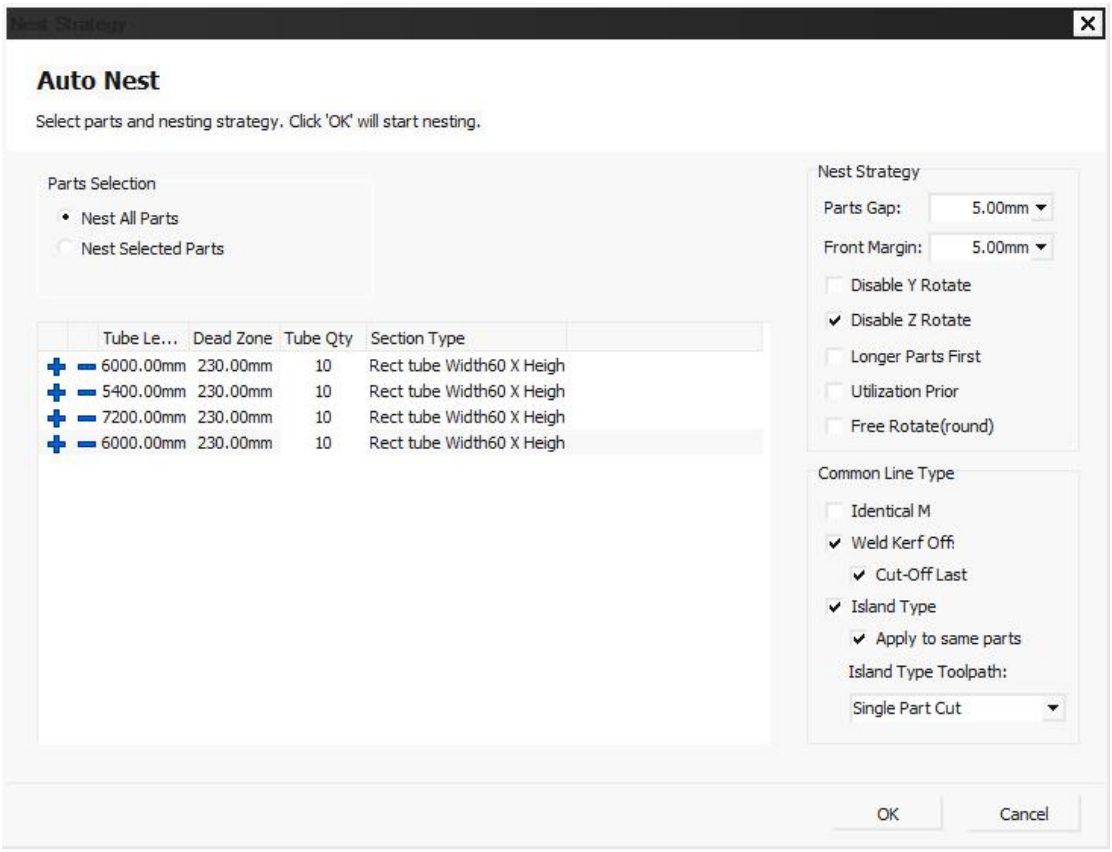

Parts selection: choose to nest all parts in list or just selected ones.

Tube length: the total length of the tube.

Dead zone: when feeding chuck reaches to its limit position towards fixed chuck, the tube body from chuck jaws to laser head is waste not able to cut which called 'dead zone'.

Front margin: the distance from tube front end to first part.

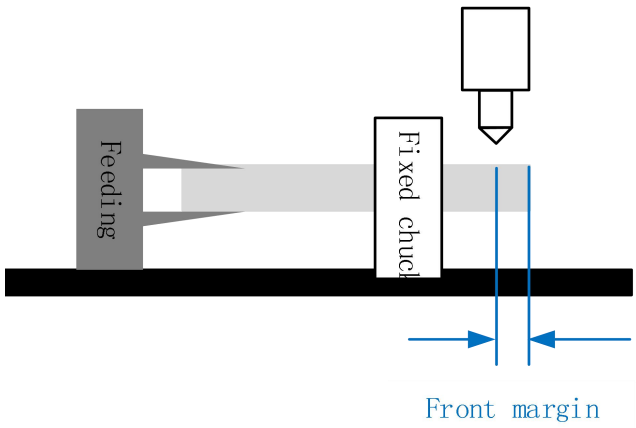

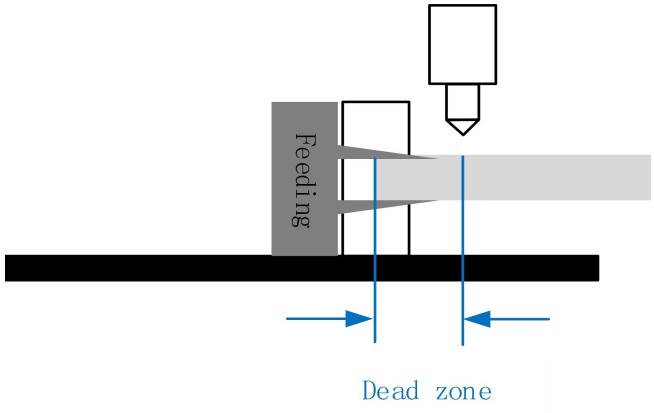

Tube total length, dead zone and front margin together decide the tube length available for nesting.

Parts gap: it is the minimal distance between two parts.

Disable Y rotate: parts cannot rotate around Y direction in nesting.

Disable Z rotate: parts cannot rotate around Z direction in nesting.

Free rotate (round type): allow round parts free rotate in nesting to minimize the waste.

2.6.3 Manual Nest

You can manually nest parts to tube for special need.

Create a new tube body click  on top of part list.

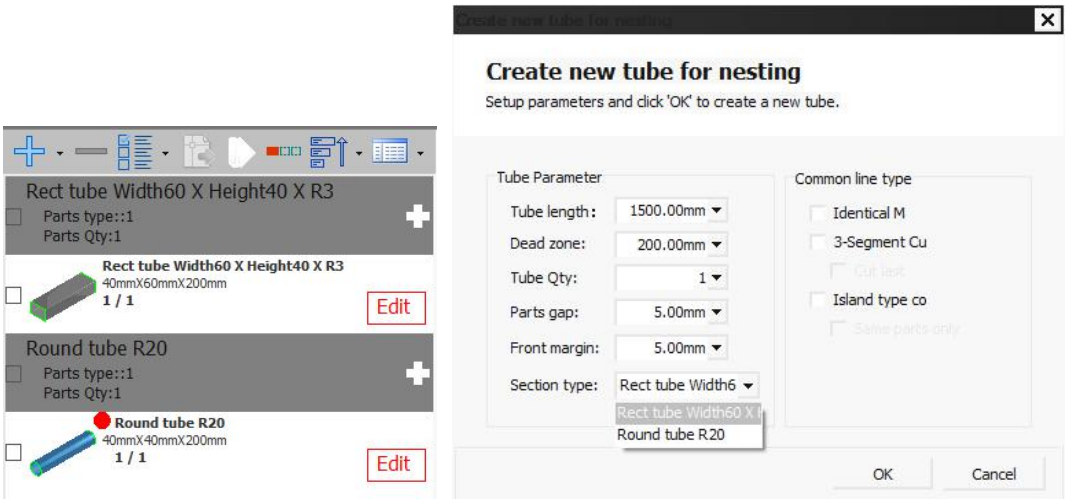

Select tube profile shape.

Tube and nesting parameters definition same in auto-nest setting.

Click 'OK' finish tube creation. Select part and click  will nest part into current tube.

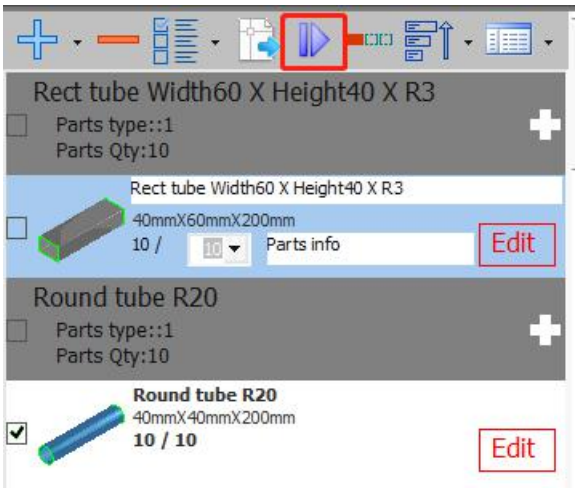

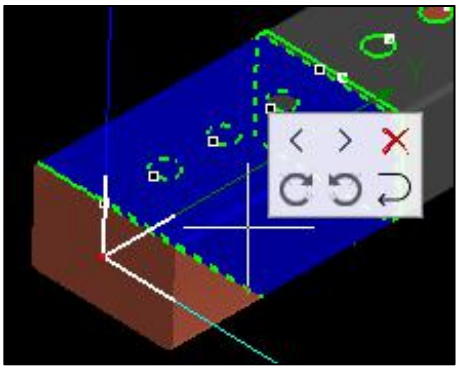

You can still manually adjust nested parts. Click nested part will call out quick access box which provided options to move part forward/backward, remove part, rotate CCW/CW, flip tube ends.

2.7 Sort

TubesT provides multiple sorting approaches, click 

select a sort pattern.

2.7.1 Auto Sort

1. Sort along Y axis

Y axis is tube heading direction, the principle of the sorting is: start from tube front to tail, the sequence of graphic in the same order along Y axis.

If two graphics start in same Y position, then follows sorting rules along CW direction.

The sorting result will be spiral forwards tube. A typical sorting result in below

image.

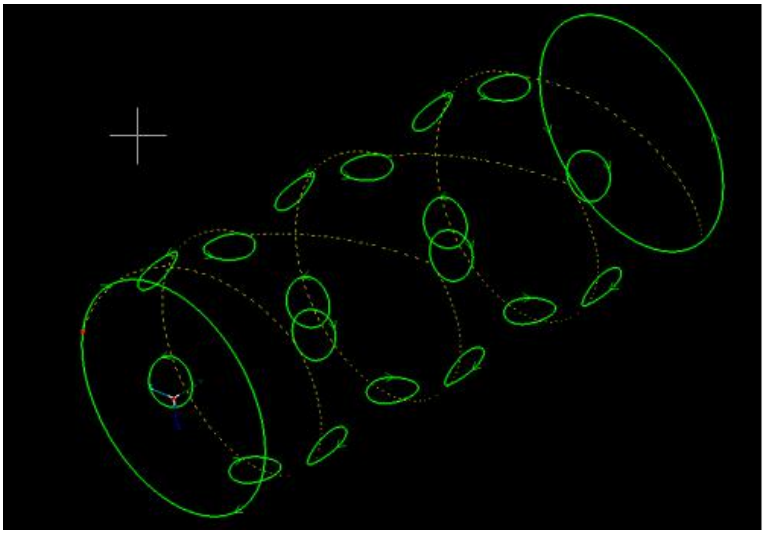

2. Sort by Face

This sorting method designed for polygon shape tube with many faces. Under this sorting method the graphics on one face will be sorted along Y axis first, finish cutting on one face then turn to next.

'**Separation**' length: this means to cut graphics on one face within given length, not the graphics on whole face of a tube.

Software will optimize travel path in S shape when turns tube face.

For example, in below picture the tube separated in A and B segment. After finish cutting on top face in a segment then turns to bottom face; after finish cutting on bottom A, it will turns to bottom B reduce the travel path.

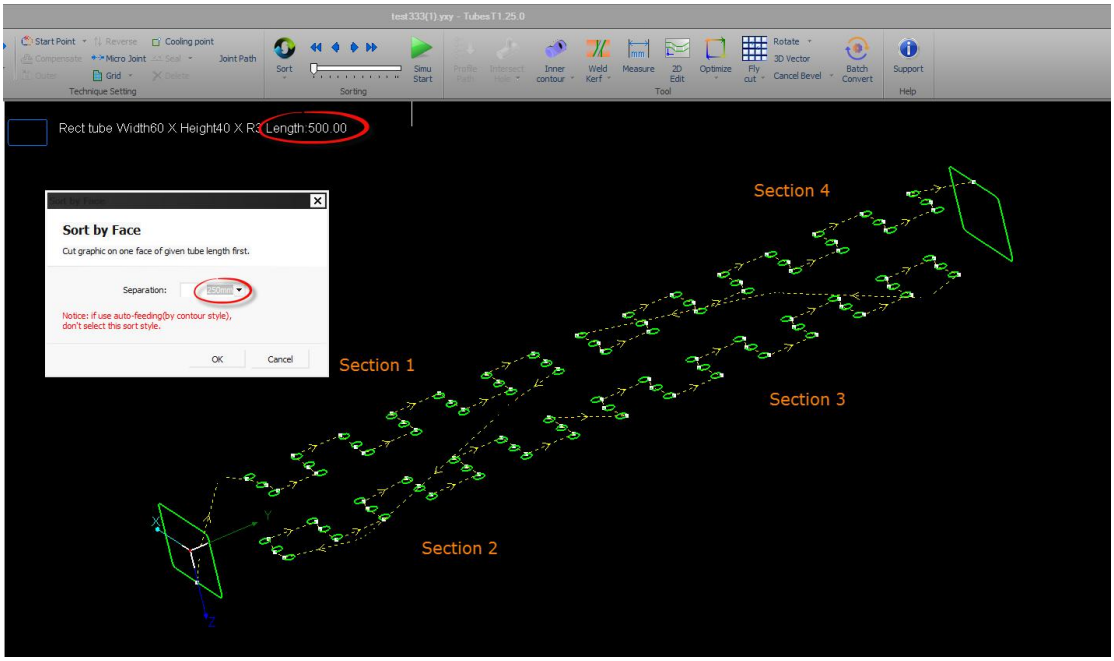

The travel path in turning face optimized in 'S shape' that reduce travel and rotation.

3. Wraps around cut-off section first

The segments (1234) will be cut before cut-off section (5), this can avoid waste in cut-off zone (5) tilt up and hit laser head.

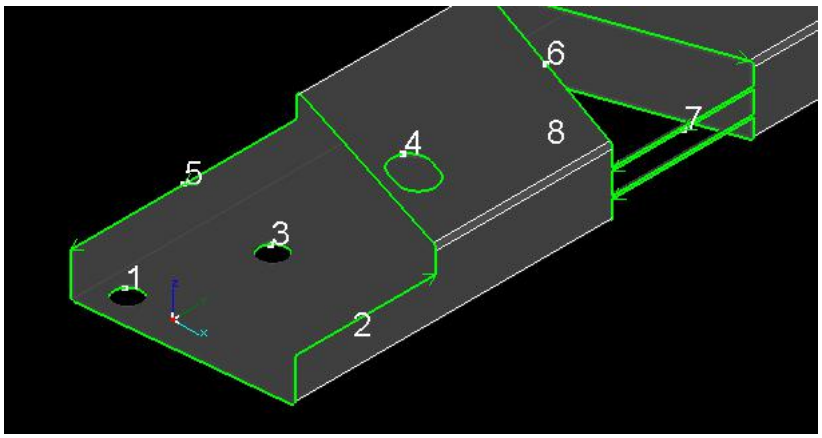

2.7.2 Manual Sort

1. Manual Sort

If auto nesting result is not satisfying, you can still manually adjust nesting result.

When click 

the render effect will turn off and part graphics

turn grey. Click graphic one by one define the cut sequence, meanwhile sorted graphics will turn green again. Finish the sorting and right click, select 'Finish sort' will apply sorting result.

2. Unfold 3D Sort

You can unfold 3D tubular body into 2D graphic which gives more detailed view for sorting.

3. Sort by Button

Select one graph and click button from  on top menu bar can move the cutting sequence one step forward or backward, set as first one or last one.

2.8 Export File

TubesT allows to export the file for cutting of a single part or the whole nesting. File of *.zx format is for TubePro, *.ctds format is for CypTube.

2.8.1 Export Nesting File

Click 

on top menu bar will export all nesting as *.zx file for cutting in TubePro machine, or you can select *.ctds format for cutting in CypTube machine.

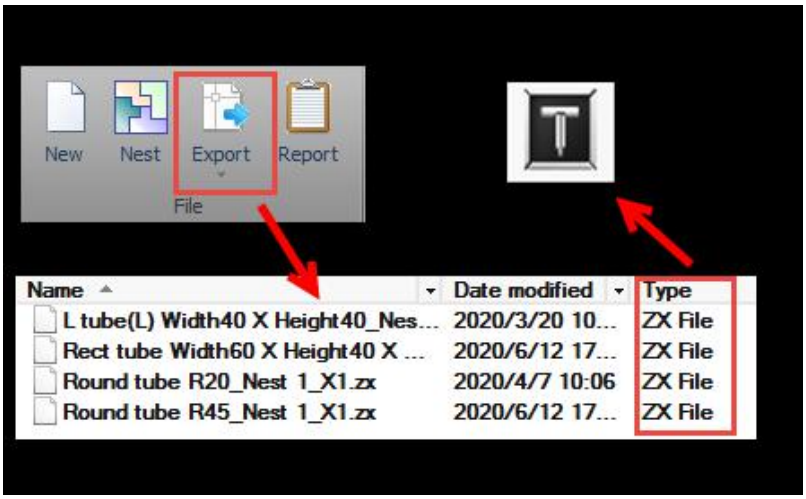

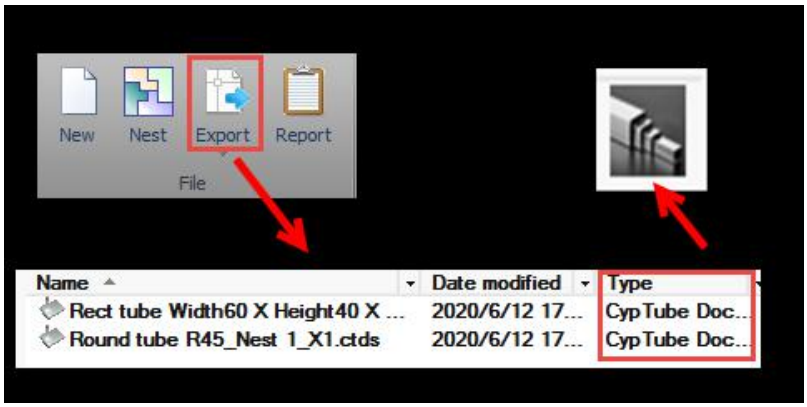

Or you can select from nesting list and export single nesting as *.zx or *.ctds file for cutting.

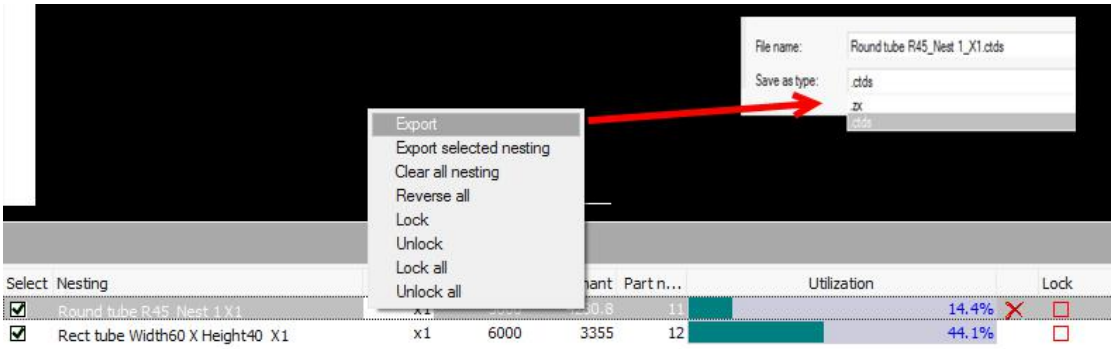

If the cutting file cannot be read by TubePro or CypTube, it's caused by version compatibility with TubesT. Update TubePro or CypTube to latest version will solve the problem.

2.8.2 Export Part File

If you only want to export cutting file of a single part, just select in part list and click .

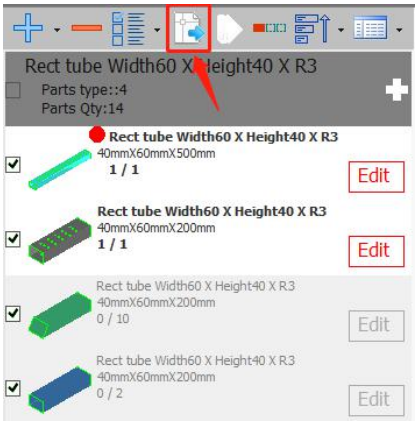

2.9 Other Functions

2.9.1 Simulate

You can simulate cutting process and check cutting sequence and direction of

nested tube.

Click 

will start simulation on current part/nesting. If you just select some of the graphics it will only simulate cutting on these selected ones.

While in simulating mode, click  to adjust simulation speed, slide  to adjust simulation progress. In static mode, click  to change sequence of selected part, slide  to quick play the cutting sequence dynamically.

2.9.2 Parts Tolerance

TubesT can classify parts of profile dimension within given tolerance into same group. For example, the round parts of radius as 38mm and 38.2mm can be classified in same group and nested in same tube.

To enable tolerance when import parts:

1. Click  open 'user habit setting' dialog box, check 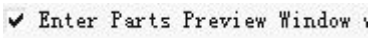

option and save the setting.



2. The first part imported in list will be reference profile. The part in example is square 80*50 mm. When import part will open below window, just click 'OK'.

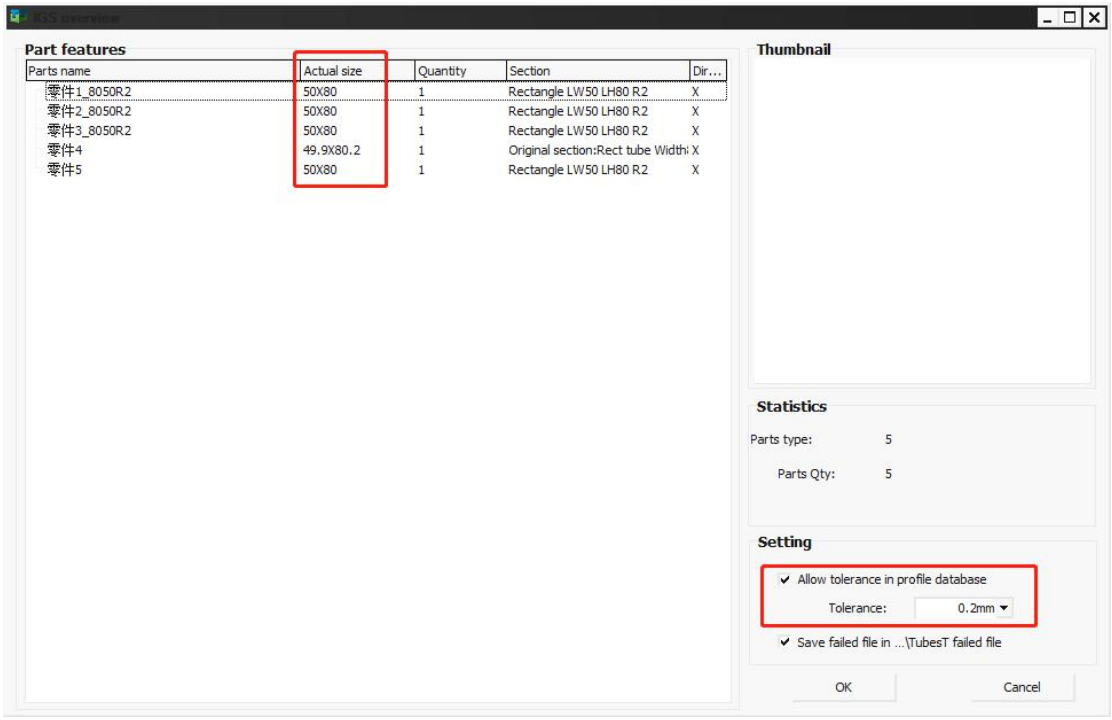

3. Click  beside the part and add it into reference profile table.



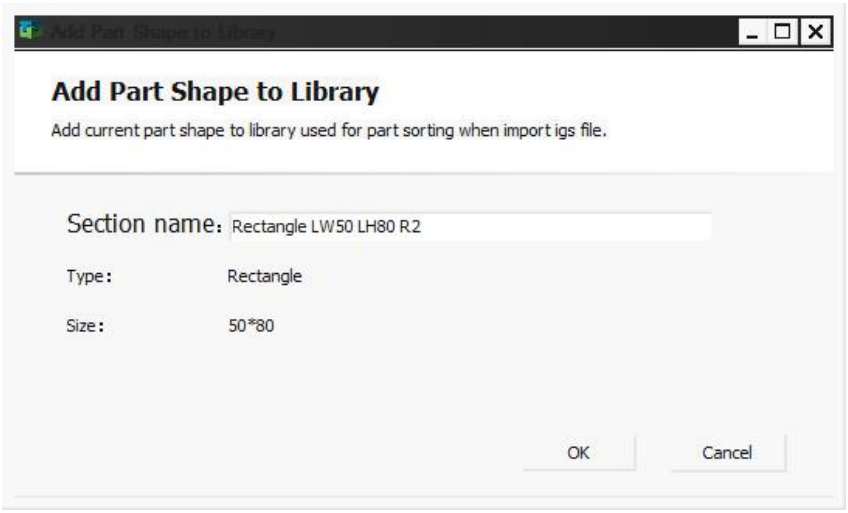

4. Add square parts of 50 * 80mm. You can see the parts listed with dimension

and profile shape.

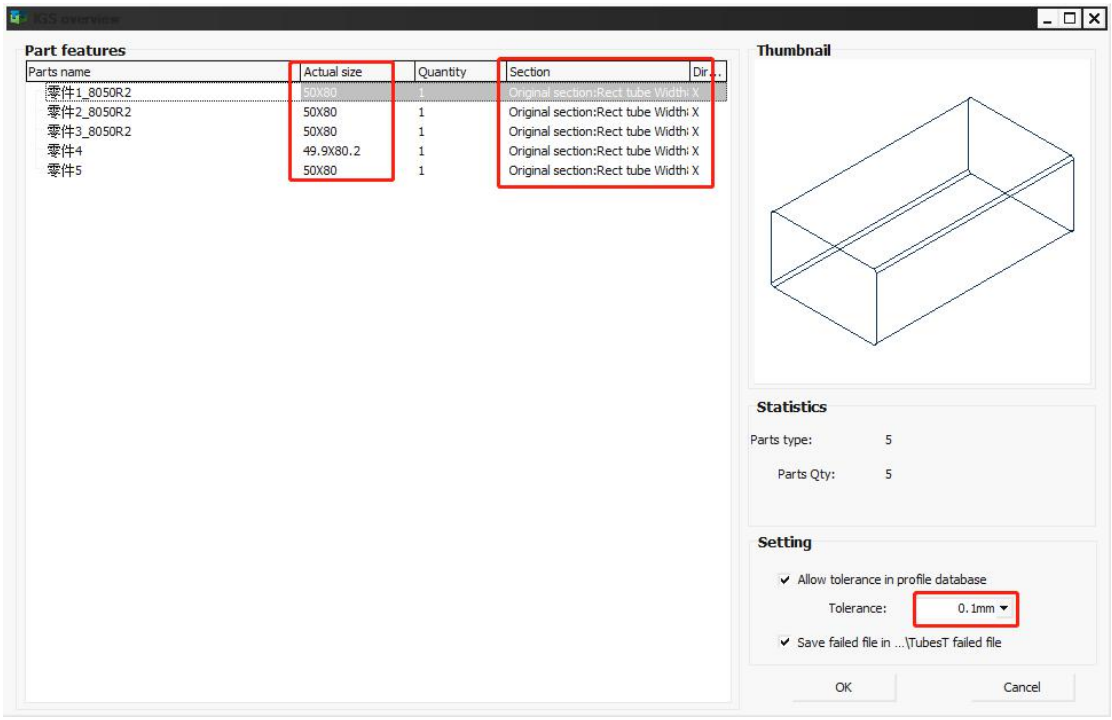

5. After set and apply tolerance you can see the square tube of 49.9 * 80.2mm grouped with the other 50 * 80mm.

And they also be grouped together in part list which can be nested in same square tube of 38mm.

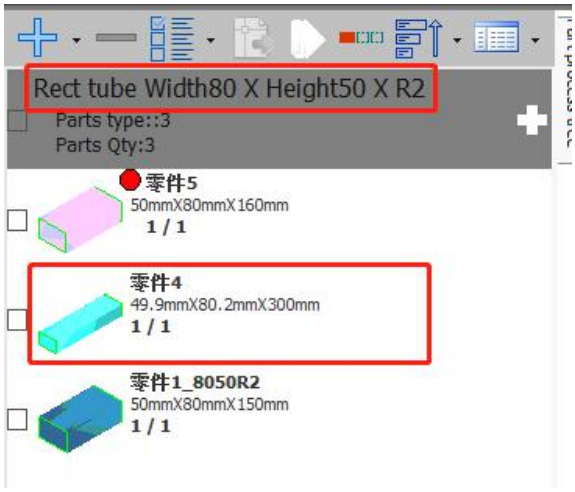



Open 'user habit setting' window you can see the added reference profile. Click ' ' can delete it.

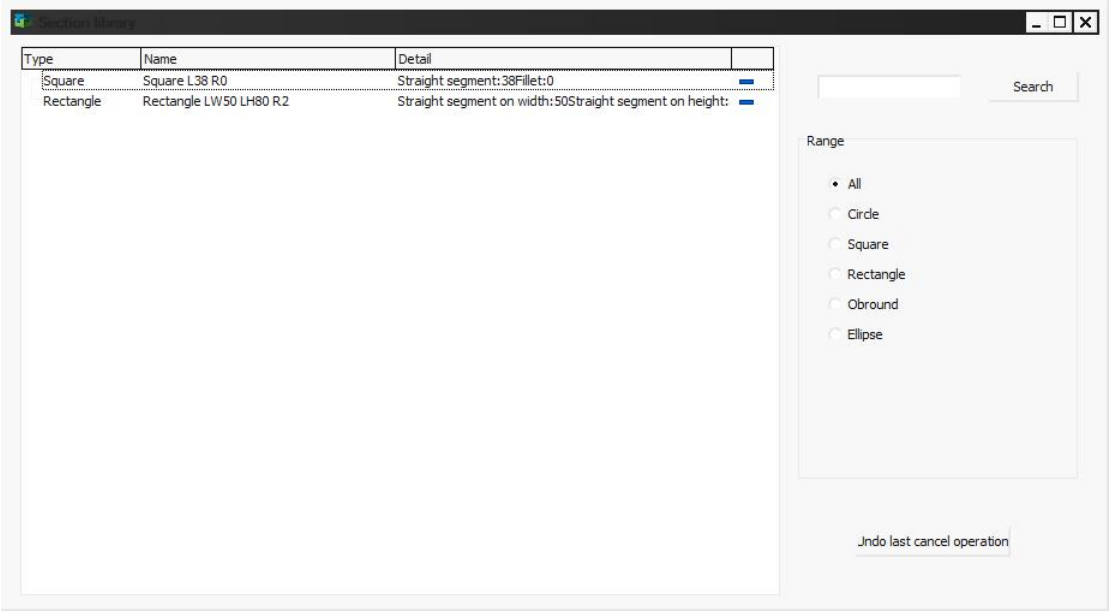

Supported profile with tolerance import are circle, square, rectangle, Obround and ellipse.

Sometimes the standard part, take round part as an example, will be misrecognize as free shape part for its drawing precision in SolidWorks. Under this case you can import part with tolerance to group it with round part.

2.9.3 Force Merge

Besides importing parts with tolerance, you can also group the parts in list of different dimension into same group by 'Force Merge'.

Select parts and right click select 'Force Merge'.

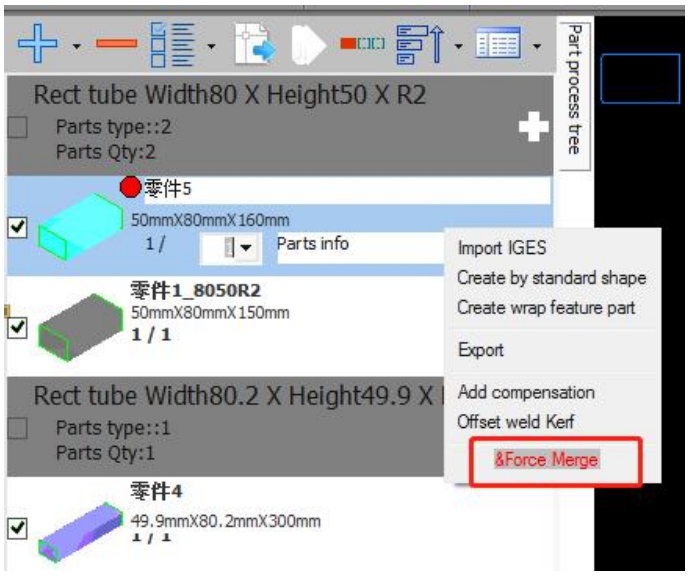



Then you can see square parts of 50*80mm and 49.9*80.2mm merged in same group for nesting.

The tolerance set in 'user configuration' window, by default only the parts dimension within 1% difference can be merged in same group.

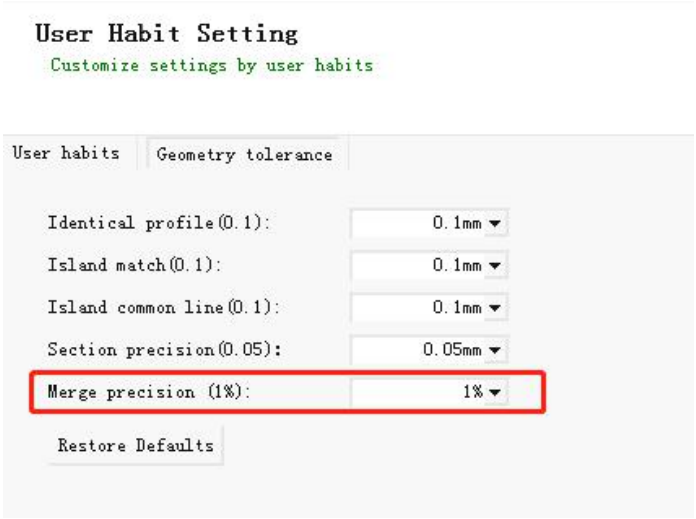

The parts will be grouped with part of largest profile dimension.

2.9.4 Auto Save *.YXY Format File

*.YXY is sketch file created by TubesT which cannot be used for cutting.

Format	File	Application	Source
IGS	Parts drawing	Nest in TubesT ,TubesT-Lite ; CypTube cutting file	CAD software like SolidWorks
SAT		Nest in TubesT, TubesT-Lite	
jhb		Nest in TubesT	Drew in TubesT
zx	Cutting file	TubePro cutting file	Export by TubesT/TubesT-Lite
zzx			
ctd		CypTube cutting file	
ctds			
yxy	Sketch File	Save the parts and nesting results for later editing in TubesT again.	Save by TubesT

Open *.YXY file by '' in TubesT will restore the editing status when it's saved including which parts nested, what technique applied etc.

It's recommended to save a *.YXY file when export cutting file, it allows user to modify the nesting or technique directly when the cutting in machine not satisfied, otherwise you have to do the nesting and technique setting again.

Click '' at top left in TubesT save the file as *.YXY file.

If you enabled 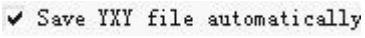

in 'User habit setting' window, TubesT will save a *.YXY file automatically under given location.

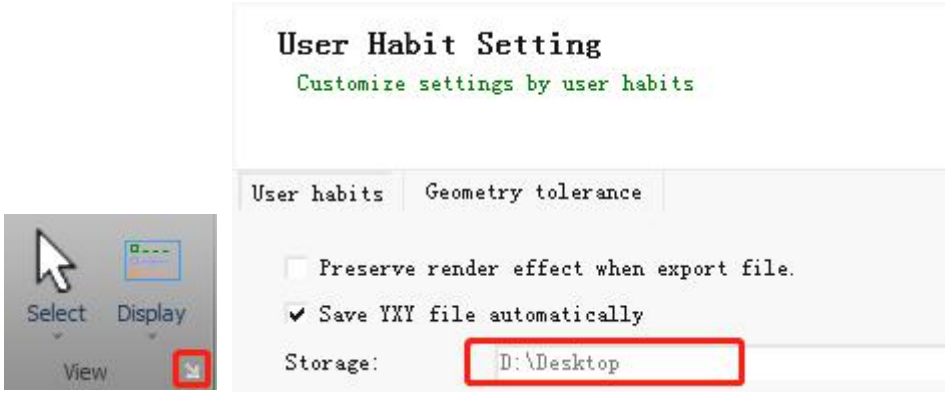

2.9.5 Length Unit

In 'User configuration' setting there is an option to read length unit when import IGES file.

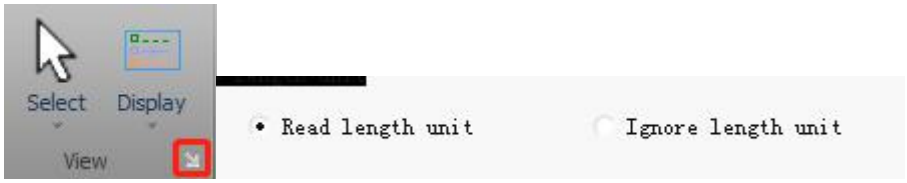

The default is 'read length unit' means TubesT read parts in same length with drawing. If you draw the square part as 50inch but what you really need is 50mm, you can select 'ignore length unit', by which TubesT only read '50' and add default unit 'mm' in TubesT, then it will be 50mm.

2.9.6 Merge Tail

This function used in 3-chuck delivering structure and in the application of delivering the tube tail to the opposite chuck for cutting, hence leaves almost no waste. Merge tail is to make sure there are enough parts on tail tube for cutting.

Merge tail is to make sure there are enough parts on tail tube for cutting.

For example, the mechanism decides the parts on tail tube must be longer than 300mm, when you input ' 300' in TubesT 'Merge Tail' you can see the parts nested on tube tail displayed in different color. The parts within 300mm range on tube tail merged together.

The wrapping holes will be cut off but the cut-off contours in between only marking not cut off.

